If you have issues viewing or accessing this file contact us at NCJRS.gov.

National Criminal Justice Reference Service

ncjrs

This microfiche was produced from documents received for inclusion in the NCJRS data base. Since NCJRS cannot exercise control over the physical condition of the documents submitted, the individual frame quality will vary. The resolution chart on this frame may be used to evaluate the document quality.

MICROCOPY RESOLUTION TEST CHART
NATIONAL BUREAU OF STANDARDS-1963-A

Microfilming procedures used to create this fiche comply with the standards set forth in 41CFR 101-11.504.

Points of view or opinions stated in this document are those of the author(s) and do not represent the official position or policies of the U. S. Department of Justice.

National Institute of Justice
United States Department of Justice
Washington, D.C. 20531

7/31/85

97212

U.S. Department of Justice
National Institute of Justice

National Institute of Justice
Technology Assessment Program

Riot Helmets and Face Shields

NIJ Standard-0104.02

97212

ABOUT THE TECHNOLOGY ASSESSMENT PROGRAM

The Technology Assessment Program is sponsored by the Office of Development, Testing, and Dissemination of the National Institute of Justice (NIJ), U.S. Department of Justice. The program responds to the mandate of the Justice System Improvement Act of 1979, which created NIJ and directed it to encourage research and development to improve the criminal justice system and to disseminate the results to Federal, State, and local agencies.

The Technology Assessment Program is an applied research effort that determines the technological needs of justice system agencies, sets minimum performance standards for specific devices, tests commercially available equipment against those standards, and disseminates the standards and the test results to criminal justice agencies nationwide and internationally.

The program operates through:

The *Technology Assessment Program Advisory Council* (TAPAC) consisting of nationally recognized criminal justice practitioners from Federal, State, and local agencies, which assesses technological needs and sets priorities for research programs and items to be evaluated and tested.

The *Law Enforcement Standards Laboratory* (LESL) at the National Bureau of Standards, which develops voluntary national performance standards for compliance testing to ensure that individual items of equipment are suitable for use by criminal justice agencies. The standards are based upon laboratory testing and evaluation of representative samples of each item of equipment to determine the key attributes, develop test methods, and establish minimum performance requirements for each essential attribute. In addition to the highly technical standards, LESL also produces user guides that explain in nontechnical terms the capabilities of available equipment.

The *Technology Assessment Program Information Center* (TAPIC) operated by the International Association of Chiefs of Police (IACP), which supervises a national compliance testing program conducted by independent agencies. The standards developed by LESL serve as performance benchmarks against which commercial equipment is measured. The facilities, personnel, and testing capabilities of the independent laboratories are evaluated by LESL prior to testing each item of equipment, and LESL helps the Information Center staff review and analyze data. Test results are published in Consumer Product Reports designed to help justice system procurement officials make informed purchasing decisions.

All publications issued by the National Institute of Justice, including those of the Technology Assessment Program, are available from the National Criminal Justice Reference Service (NCJRS), which serves as a central information and reference source for the Nation's criminal justice community. For further information, or to register with NCJRS, write to the National Institute of Justice, National Criminal Justice Reference Service, Washington, DC 20531.

James K. Stewart, Director
National Institute of Justice

97212

U.S. Department of Justice
National Institute of Justice

This document has been reproduced exactly as received from the person or organization originating it. Points of view or opinions stated in this document are those of the authors and do not necessarily represent the official position or policies of the National Institute of Justice.

Permission to reproduce this copyrighted material has been granted by
Public Domain/NIJ
U.S. Department of Justice
to the National Criminal Justice Reference Service (NCJRS).

Further reproduction outside of the NCJRS system requires permission of the copyright owner.

97212

Technology Assessment Program

NIJ Standard for Riot Helmets and Face Shields

NIJ Standard-0104.02

Supersedes NIJ Standard-0104.01 dated August 1980

A Voluntary National Standard Promulgated by the National Institute of Justice

October 1984

U.S. Department of Justice
National Institute of Justice

U.S. DEPARTMENT OF JUSTICE
National Institute of Justice

James K. Stewart, Director

ACKNOWLEDGMENTS

This standard was formulated by the Law Enforcement Standards Laboratory of the National Bureau of Standards under the direction of Lawrence K. Eliason, Chief of LESL. The technical research was performed by Nicholas J. Calvano of the Automated Production Technology Division. The standard has been reviewed and approved by the Technology Assessment Program Advisory Council (TAPAC) and adopted by the International Association of Chiefs of Police (IACP) as an IACP standard.

FOREWORD

This document, NIJ Standard-0104.02, Riot Helmets and Face Shields, is an equipment standard developed by the Law Enforcement Standards Laboratory of the National Bureau of Standards. It is produced as part of the Technology Assessment Program of the National Institute of Justice. A brief description of the program appears on the inside front cover.

This standard is a technical document that specifies performance and other requirements equipment should meet to satisfy the needs of criminal justice agencies for high quality service. Purchasers can use the test methods described in this standard themselves to determine whether a particular piece of equipment meets the essential requirements, or they may have the tests conducted on their behalf by a qualified testing laboratory. Procurement officials may also refer to this standard in their purchasing documents and require that equipment offered for purchase meet the requirements. Compliance with the requirements of the standard may be attested to by an independent laboratory or guaranteed by the vendor.

Because this NIJ standard is designed as a procurement aid, it is necessarily highly technical. For those who seek general guidance concerning the selection and application of law enforcement equipment, user guides have also been published. The guides explain in nontechnical language how to select equipment capable of the performance required by an agency.

NIJ standards are subjected to continuing review. Technical comments and recommended revisions are welcome. Please send suggestions to the Program Manager for Standards, National Institute of Justice, U.S. Department of Justice, Washington, DC 20531.

Before citing this or any other NIJ standard in a contract document, users should verify that the most recent edition of the standard is used. Write to: Chief, Law Enforcement Standards Laboratory, National Bureau of Standards, Washington, DC 20234.

Lester D. Shubin
Program Manager for Standards
National Institute of Justice

NIJ STANDARD
FOR
RIOT HELMETS AND FACE SHIELDS

CONTENTS

	Page
Foreword	iii
1. Purpose and Scope	1
2. Classification	1
3. Definitions	1
4. Requirements	3
4.1 Riot Helmet Requirements	3
4.1.1 Sampling for Test	3
4.1.2 User Information	3
4.1.3 Labeling	3
4.1.4 Construction	3
4.1.5 Peripheral Vision	3
4.1.6 Impact Attenuation	3
4.1.7 Penetration Resistance	4
4.1.8 Retention System	4
4.2 Face Shield Requirements	4
4.2.1 Sampling for Test	4
4.2.2 Light Transmission	4
4.2.3 Prismatic Power	4
4.2.4 Refractive Power	4
4.2.5 Resolving Power	4
4.2.6 Impact Protection	4
4.2.7 Fastening System	4
5. Test Methods	4
5.1 Riot Helmet Test Methods	4
5.1.1 Pretest Inspection	4
5.1.2 Test Sequence	5
5.1.3 Peripheral Vision Test	5
5.1.4 Impact Attenuation Test	6
5.1.5 Penetration Resistance Test	8
5.1.6 Retention System Test	9
5.2 Face Shield Test Methods	10
5.2.1 Light Transmission Test	10
5.2.2 Prismatic Power Test	11
5.2.3 Refractive Power and Resolving Power Test	12
5.2.4 Impact Protection and Fastening System Test	12
Appendix A—References	15

Preceding page blank

NIJ STANDARD FOR RIOT HELMETS AND FACE SHIELDS

1. PURPOSE AND SCOPE

The purpose of this standard is to establish requirements and methods of test for helmets and face shields to be worn by law enforcement officers during civil disturbances, riots, or other situations that pose a threat of injury from blows to the head. This standard is a revision of and supersedes NIJ Standard-0104.01 dated August 1980. This revision of the standard changes the impact attenuation requirement, deletes the requirement for wet testing of helmets, modifies the requirement and test method for peripheral vision limits, and clarifies test methods and test equipment requirements. The scope of the standard is limited to riot helmets and face shields. It should be noted that they are not designed to offer protection against gunfire. Ballistic helmets and crash helmets are covered by other NIJ standards [1,2].*

2. CLASSIFICATION

2.1 Face Shields

Face shields covered by this standard are of one class.

2.2 Riot Helmets

Riot helmets covered by this standard are of one class.

3. DEFINITIONS

3.1 Basic Plane

The plane through the centers of the external ear openings and the lower edges of the eye sockets (see fig. 1).

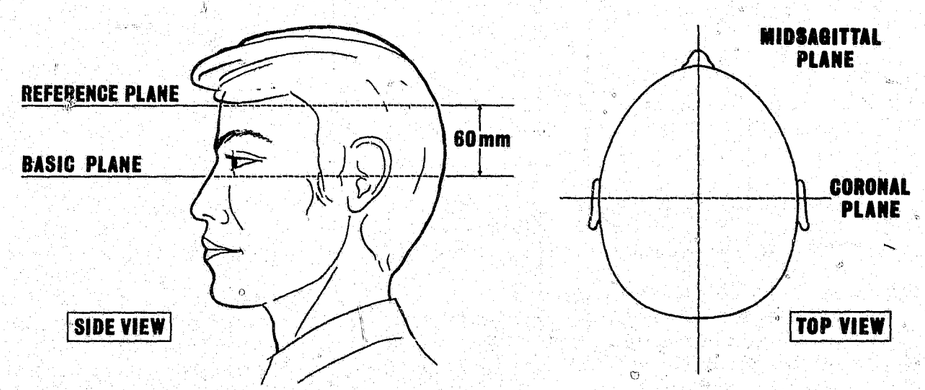

FIGURE 1. *Head planes.*

* Numbers in brackets refer to the references in appendix A.

3.2 Coronal Plane

The plane, perpendicular to the basic and midsagittal planes, which passes through the centers of the external ear openings (see fig. 1).

3.3 Edging

The edge, rim, or rim trim around a helmet.

3.4 Headform

A test device that simulates the configuration of the human head.

3.5 Impact Attenuation

A measure of the extent to which impact energy delivered to a helmeted head is reduced by the helmet intervention. For the purpose of this standard, impact attenuation is evaluated through the measurement of the peak acceleration of a headform secured within a helmet when subjected to an impact energy of 108 J (80 lbf-ft) at a velocity of 6.6 m/s (21.7 ft/s). The peak acceleration of the headform decreases with increasing impact attenuation.

3.6 Midsagittal Plane

The plane, perpendicular to the basic and coronal planes, which symmetrically bisects the head (see fig. 1).

3.7 Primary Visual Area

The face shield area that is bounded at the top by a line 12 mm inside the top edge of the face shield, is 85 mm from top to bottom, and is bounded at the sides by the arcs of a circle of 90 mm radius with its center located at the intersection of the midsagittal plane, the front surface of the face shield, and the plane that is 15 mm above and parallel to the basic plane (see fig. 2).

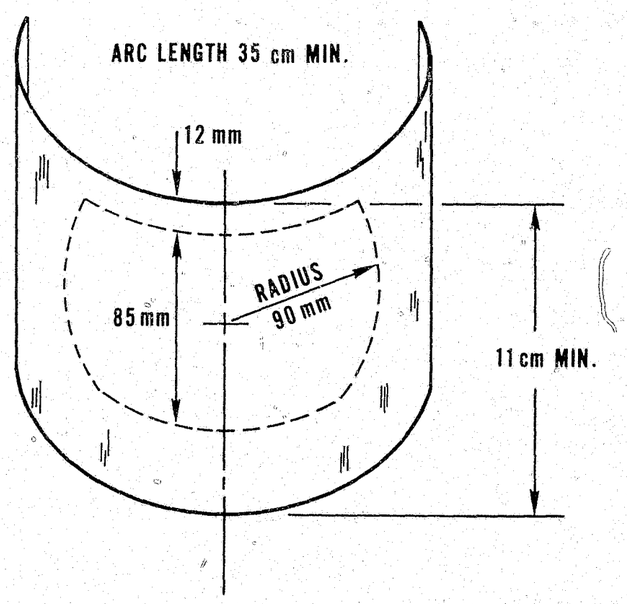

FIGURE 2. *Face shield configuration. The primary visual area is outlined with dashed lines.*

3.8 Reference Plane

The plane 60±1 mm above and parallel to the basic plane.

3.9 Retention System

The complete assembly by which the helmet is retained in position on the head.

4. REQUIREMENTS

4.1 Riot Helmet Requirements

4.1.1 Sampling for Test

Four riot helmets, size 7-1/4 or medium and selected at random, shall constitute a test sample. Three helmets from the test sample shall be used as test specimens to determine compliance with the requirements of sections 4.1.5 through 4.1.8. The fourth helmet shall be reserved for retest if required in accordance with section 4.1.6.

4.1.2 User Information

The information supplied to the user with each helmet shall include the following: (a) recommended cleaning agents, paints, adhesives, etc., which can be applied to the helmet without damaging the shell and impairing its function; and (b) a warning that a helmet that has been subjected to a severe blow may thereafter offer decreased protection to the wearer.

4.1.3 Labeling

Each helmet shall be permanently and legibly labeled in a manner such that the label can be easily read without removing padding or any other permanent part, and shall include the following information: (a) name or designation of manufacturer; (b) model designation; (c) size; (d) month and year of manufacture; and (e) lot number. Items (d) and (e) may be incorporated into a single number such as a serial number.

4.1.4 Construction

The helmets shall be free from dents, blisters, cracks, crazing, chipped or sharp corners, and other evidence of inferior workmanship. They shall have no slits, holes, or other openings above the reference plane and shall have no incompressible projections that protrude more than 2.5 mm inside the shell or more than 5.0 mm outside the shell.

4.1.5 Peripheral Vision

The helmets shall provide peripheral visual clearance of at least 105° to each side of the midsagittal plane when measured in accordance with section 5.1.3.

4.1.6 Impact Attenuation

Three helmet test specimens shall be tested for impact attenuation in accordance with section 5.1.4, each of which has been conditioned to one of three different temperatures in accordance with section 5.1.4.2. A total of 12 impact tests is required for the three helmet test specimens (four impact sites on each helmet).

The measured peak acceleration shall not exceed 320 times the standard acceleration of free fall (320 g_n*) for any two of the 12 required impact tests and shall not exceed 300 g_n for the other 10 impact tests.

Should a single measured peak acceleration exceed 320 g_n and the helmet would otherwise comply with the above requirements a retest is permitted. The retest shall be conducted with a new specimen and shall be at the same impact site and temperature. If the peak acceleration measured during retest does not exceed 320 g_n, the helmet meets the impact attenuation requirements of this standard.

* g_n=9.81 meters per second per second.

4.1.7 Penetration Resistance

Each of the three helmet test specimens, conditioned as required in section 4.1.6, shall be tested for penetration resistance in accordance with section 5.1.5, without any demonstrable electrical contact being made between the penetration test striker and the test headform.

4.1.8 Retention System

Each of the helmet test specimens, conditioned as required in section 4.1.6, shall be tested for retention system static strength in accordance with section 5.1.6, without any break occurring and without any resulting slip or stretch of more than 25 mm.

4.2 Face Shield Requirements

4.2.1 Sampling for Test

Three face shields, selected at random, shall constitute a test sample.

4.2.2 Light Transmission

Each face shield specimen shall be tested for light transmission in accordance with section 5.2.1. The light transmission at every part of the primary visual area shall be no less than 75 percent.

4.2.3 Prismatic Power

Each face shield specimen shall be tested for prismatic power in accordance with section 5.2.2. The center of the primary visual area shall be free of any distortion that would cause the intersection of the telescope crosshairs to fall outside the inner circle of the test target. The entire primary visual area shall be free of any distortion that would cause the crosshairs to fall outside the outer circle of the test target.

4.2.4 Refractive Power

Each face shield specimen shall be tested for refractive power in accordance with section 5.2.3. The refractive power shall be between −1/8 and +1/8 diopter.

4.2.5 Resolving Power

Each face shield specimen shall be tested for resolving power in accordance with section 5.2.3. The resolving power shall be such that the series of lines marked "34" on the NBS Resolution Test Chart 1952 [3] is clearly resolved.

4.2.6 Impact Protection

Each face shield shall be tested for impact protection in accordance with section 5.2.4 without any demonstrable electrical contact being made between the face shield and either of the two test headform contact sensors.

4.2.7 Fastening System

Each face shield shall remain attached to the helmet by all of its fastening devices after subjection to the impact protection test described in section 5.2.4.

5. TEST METHODS

5.1 Riot Helmet Test Methods

5.1.1 Pretest Inspection

Inspect the user information provided with the helmets and the helmet labels to determine compliance with sections 4.1.2 and 4.1.3, respectively. Also examine the helmet construction and measure the distance that any incompressible projection protrudes inside and outside of the helmet shell to determine compliance with section 4.1.4, and verify that the helmets are size 7-1/4 or medium.

5.1.2 Test Sequence

The helmets shall be tested for compliance with the requirements of sections 4.1.5, 4.1.6, 4.1.7, and 4.1.8, in that sequence.

5.1.3 Peripheral Vision Test

5.1.3.1 Test Headform

The test headform shall be size 7-1/4 (see fig. 4). The measurement of peripheral vision is facilitated by two symmetrical slots that define a 125° angle lying in the basic plane, with the apex at the point of intersection of the midsagittal and basic planes and the front surface of the headform, as shown in figure 3.

5.1.3.2 Test Procedure

Place the helmet squarely on the headform so that the midsagittal plane of the helmet coincides with the midsagittal plane of the headform and fasten the chin strap securely. The angle of peripheral vision is shown in figure 3. It is measured as the angle lying in the basic plane with its apex at the surface of the headform, one leg tangent to the edge of the helmet, and the other the midsagittal plane. Measure the peripheral vision angle of each of the four helmet samples three times using any method accurate to 1°. Report the average of the 12 measurements as the angle of peripheral vision.

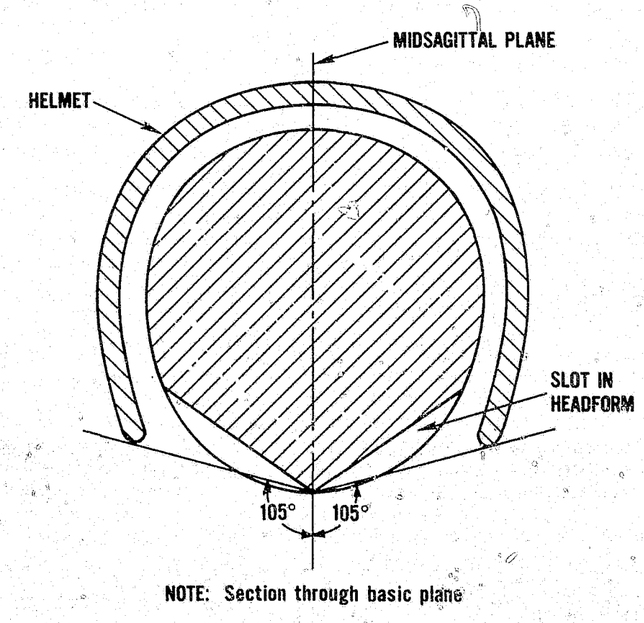

FIGURE 3. *Peripheral vision test.*

5.1.4 Impact Attenuation Test

5.1.4.1 Test Equipment

5.1.4.1.1 Test Headform

The test headform shall be size 7-1/4 and shall exhibit no resonance frequencies below 3000 Hz; it may be made of any nonresilient material. For the purpose of this test, nonresilient is defined as a modulus of elasticity (flexural) greater than 5×10^5 psi. Its dimensions are given in figure 4.

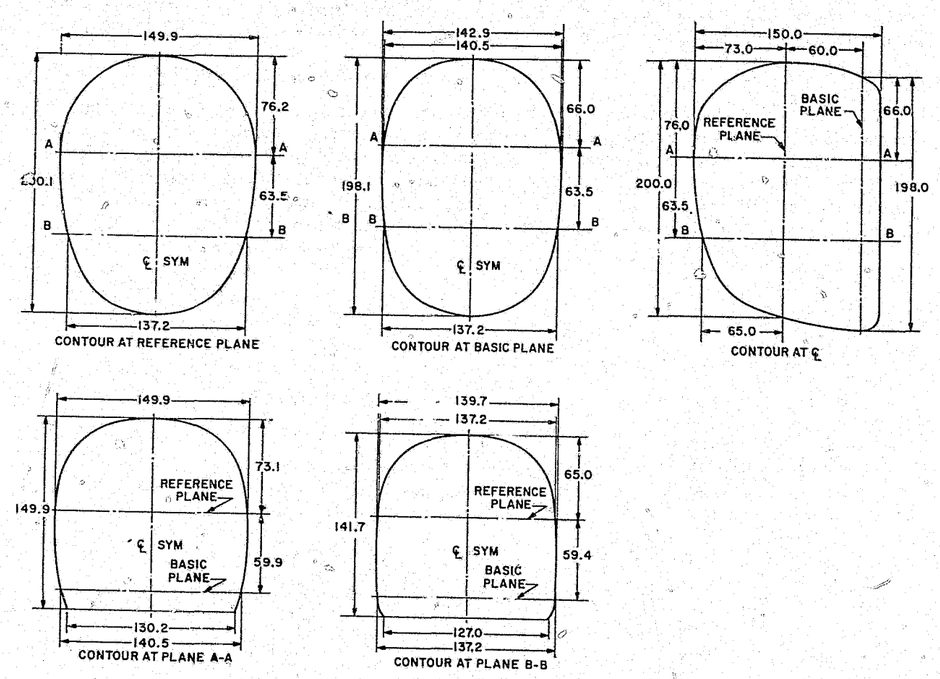

FIGURE 4. *Size 7-1/4 test headform, dimensions in millimeters.*

5.1.4.1.2 Drop Assembly

The drop assembly, consisting of the test headform, the accelerometer, and the supporting arm, shall have a total mass of 5.1±0.1 kg. The center of mass of the assembly shall lie within a cone of 10° included angle about the vertical, with its apex at the point of impact.

5.1.4.1.3 Test Anvil

The test anvil shall be made of steel and have a hemispherical striking surface with a 48 mm radius of curvature. The anvil shall be firmly mounted on a steel plate 250×250×25 mm minimum, backed with a solid mass of at least 140 kg.

5.1.4.1.4 Acceleration Measurement System

The accelerometer should be able to withstand shocks up to 2000 g_n. The acceleration data channel, including all instrumentation which may alter the frequency content of the test data and all recording and analysis procedures, shall comply with SAE Recommended Practice J211b requirements for channel class 1000 [4]. The time duration of acceleration shall be measurable within ±0.1 ms.

5.1.4.1.5 Reference Anvil

When the bare drop assembly is dropped on the reference anvil from an appropriate height, it shall produce a peak acceleration of 400±20 g_n and accelerations above 200 g_n of at least 1-ms duration. The reference anvil may be made of any material that will reproducibly yield these results with a precision of ±0.1 ms. A reference anvil found to be suitable is a 1-in Open Blue Modular Elastomer Programmer, available from United States Testing Company, Inc., Instrument Marketing Division, 1415 Park Avenue, Hoboken, NJ 07030.

5.1.4.1.6 Environmental Chambers

The environmental chamber or chambers shall be capable of providing ambient temperatures of −10±2 °C (14±3 °F) and 50±2 °C (122±3 °F), and of holding those temperatures for at least 24 h.

5.1.4.2 Conditioning for Testing

5.1.4.2.1 Room Temperature

Condition one helmet at a temperature of 20 to 28 °C (68 to 82 °F) for at least 4 h.

5.1.4.2.2 Low Temperature

Condition a second helmet by placing it in an environmental chamber at a temperature of −10±2 °C (14±3 °F) for not less than 4 h nor more than 24 h.

5.1.4.2.3 High Temperature

Condition a third helmet by placing it in an environmental chamber at a temperature of 50±2 °C (122±3 °F) for not less than 4 h nor more than 24 h.

5.1.4.3 Test Procedure

Set up the test equipment as shown in figure 5. Mount the accelerometer at the center of mass of the drop assembly with the sensitive axis aligned to within 5° of the vertical. Throughout the calibration and testing, maintain the ambient temperature at 20 to 28 °C (68 to 82 °F) and the relative humidity at 30 to 70 percent.

Prior to testing, allow all electronic equipment to warm up for 30 min or until stability is achieved, whichever time is greater. Check the instrumentation before and after each period of testing by dropping the bare instrumented drop assembly onto the reference anvil three times from the height which experience has shown will produce a peak acceleration of 400±20 g_n and an acceleration above 200 g_n of at least 1-ms duration. Should the average acceleration-time history obtained prior to testing differ from this, adjust the equipment as necessary. Should the post-test average differ from the pretest average by more than 40 g_n, discard the entire test series.

Precondition one each of the three helmets comprising the test sample to room temperature, low temperature, and high temperature, in accordance with section 5.1.4.2. Begin testing immediately after a helmet is removed from the conditioning environment. After 5 min of testing return the helmet to the conditioning environment for at least 15 min, and continue this alternation until the testing is completed.

Position the helmet squarely on the test headform and secure it by its chin strap or other means that will not interfere with the test. Adjust the vertical drop height to provide an impact velocity of 6.6±0.3 m/s. Impact each helmet once at each of four sites: front, side, back, and top, as follows.

Impact the front of each helmet in the area bounded by the reference plane, the plane parallel to and 50 mm above the reference plane, and the planes parallel to and 50 mm to either side of the midsagittal plane.

Impact the side of each helmet in the area bounded by the reference plane, the plane parallel to and 50 mm above the reference plane, and the planes parallel to and 50 mm to either side of the coronal plane.

Impact the back of each helmet in the area bounded by the reference plane, the plane parallel to and 50 mm above the reference plane, and the planes parallel to and 50 mm to either side of the midsagittal plane.

Impact the top of each helmet at a point within 50 mm of the intersection of the midsagittal plane, the coronal plane, and the outer surface of the helmet.

Record the acceleration-time history of each impact and continue this procedure until each of the three conditioned helmets has been tested. Following the test, inspect the data for compliance with the requirements of section 4.1.6. If necessary, condition the fourth helmet as appropriate and impact it once at the retest impact location.

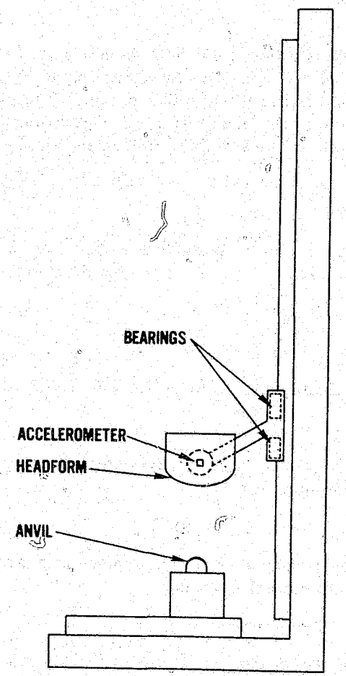

FIGURE 5. *Impact attenuation test setup.*

5.1.5 Penetration Resistance Test

5.1.5.1 Test Equipment

5.1.5.1.1 Test Headform

The test headform shall be size 7-1/4 and, above the reference plane, shall have an electrically-conductive surface which is electrically connected to the contact indicator (sec. 5.1.5.1.3). While the material used for the electrically-conductive surface is not critical, aluminum foil is not suitable for this purpose.

5.1.5.1.2 Penetration Striker

The penetration striker shall be electrically conductive and have a mass of 3000+45–0 g. The point of the striker shall be a cone with an included angle of 60±0.5°, a height of 38 mm, and a tip radius of 0.5±0.1 mm. The hardness of the striking tip shall be Rockwell scale C 60. The penetration striker shall be electrically connected to the contact indicator (sec. 5.1.5.1.3).

5.1.5.1.3 Contact Indicator

The contact indicator shall indicate when electrical contact of 1-ms duration or longer has been made between the penetration striker and the conductive surface of the test headform.

5.1.5.2 Test Procedure

Set up the test equipment as shown in figure 6. Again condition each of the three helmets that had been subjected to the impact attenuation test in the same environment in which it had been conditioned for that test, as described in section 5.1.4.2.

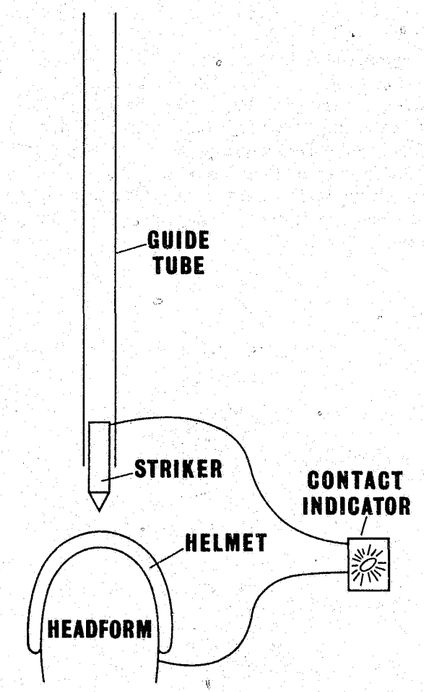

FIGURE 6. *Penetration test setup.*

Place the conditioned helmet on the test headform and secure it by its chin strap or by other means that will not interfere with the test. Adjust the helmet in the same manner as a person would adjust it to his or her head. Drop the penetration striker in guided fall onto the outer surface of the helmet anywhere above the reference plane and at least 75 mm from the center of a previous impact site or penetration site. Drop the striker from a height of 3.00+0.01–0 m, as measured from the striker point to the point of the impact on the outer surface of the helmet. Subject each of the three helmets to at least two penetration blows. Following each test, remove the helmet from the headform and touch the electrically-conductive surface with the penetration striker at the point of impact to verify the continuity of contact indicator circuit.

5.1.6 Retention System Test

5.1.6.1 Test Headform

The test headform shall be size 7-1/4 and capable of supporting the helmet when a load of 1500 N (337 lbf) is applied to the retention system.

5.1.6.2 Test Procedure

Again condition each of the three helmets that had been subjected to the impact attenuation and penetration resistance tests in the same environment in which it had been conditioned for those tests, as described in section 5.1.4.2.

Place the conditioned helmet on the rigidly-mounted test headform in such a manner that it will not move during the application of the test loads and fasten the chin strap to the loading device, as shown in

figure 7. Take care that the points of attachment of the chin strap to the helmet as well as the chin strap itself will be subjected to the test.

Apply the test loads perpendicular to the basic plane of the headform and symmetrically with respect to the helmet retention system.

Statically load the retention system with 225 N (50.6 lbf) for at least 30 s and then measure the maximum distance between the chin strap and the apex of the helmet. Do not remove the load.

Apply an additional 1230 N (276.5 lbf) to the retention system for at least 3 min and again measure the maximum distance between the chin strap and the apex of the helmet.

Record any break in the retention system and the static load at the time of failure. Record any slip or stretch as the difference between the two distance measurements. Continue this test until each of the three conditioned helmets has been tested.

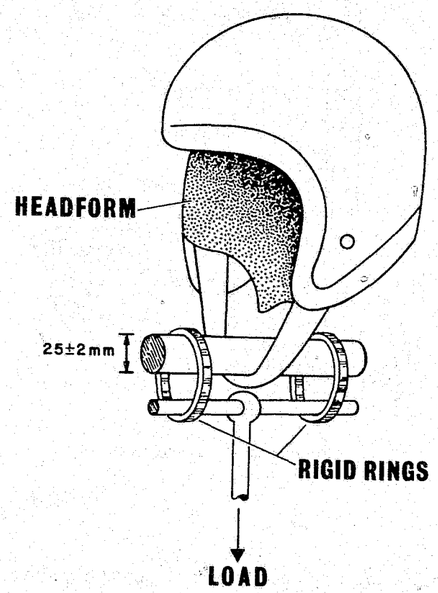

FIGURE 7. *Retention system test setup.*

5.2 Face Shield Test Methods

5.2.1 Light Transmission Test

5.2.1.1 Test Equipment

5.2.1.1.1 Light Source

The light source shall consist of a quartz-halogen lamp mounted inside a box with matte white inner surfaces for maximum diffusion. Centered on one face of the box shall be an 8×8-cm window fitted with a flashed opal glass diffuser mounted inside the box with its flashed side facing away from the lamp. The lamp shall be operated so that its color temperature is 2856 °K as viewed through the diffuser.

5.2.1.1.2 Photometer

The photometer shall be equipped with a photodetector whose spectral response is corrected to approximate the CIE photopic curve [5]. The photometer's maximum sensitivity shall be at 550±25 nm and it shall not respond to wavelengths below 425±25 nm or above 700±25 nm. Its field of view shall be between 2° and 8°.

5.2.1.2 Test Procedure

Set up the test equipment as shown in figure 8, with the photometer 30 cm from the light source diffuser. Align the optic axis of the photometer with the light bulb and the center of the luminous area, perpendicular to the surface of the light source diffuser.

With no test specimen in the light path, adjust the photometer sensitivity so that the photometer reads close to full scale and record the photometer reading as I_0.

Clean the face shield thoroughly and place it in the light path so that its convex face is perpendicular to and no more than 6 mm in front of the diffuser and its concave face is toward the photometer. Record the resulting photometer reading as I and calculate the light transmission as $100\ I/I_0$.

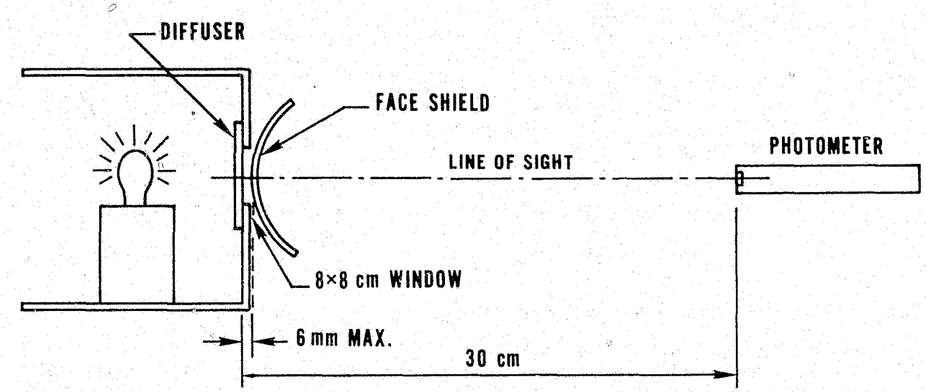

FIGURE 8. *Light transmission test setup.*

5.2.2 Prismatic Power Test

5.2.2.1 Test Equipment

5.2.2.1.1 Telescope

The telescope shall have a magnifying power of 8 to 10 diam and shall be equipped with crosshairs. It shall have an effective aperture of 19 to 25 mm.

5.2.2.1.2 Test Target

The test target shall consist of two concentric circles having diameters of 10 mm and 25 mm, respectively, with their center marked with an "X". The target shall be drawn in black on a white background and illuminated so that it is clearly visible when viewed through the telescope from a distance of 6 m.

5.2.2.2 Test Procedure

Set up the test equipment as shown in figure 9, with the target located 6 m from the objective lens of the rigidly mounted telescope. With no test specimen in the line of sight, focus the telescope on the test target and adjust their positions so that the intersection of the telescope crosshairs is centered over the "X" at the center of the test target.

Then position the face shield so that its concave side faces the telescope and the center of its primary viewing area is 8 cm in front of the telescope and normal to the line of sight. Refocus the telescope on the test target and observe whether the intersection of the telescope crosshairs falls within the image of the inner circle of the test target.

Test the entire primary visual area of the face shield by moving it through the line of sight of the telescope, taking care to assure that the part of the face shield in the line of sight is perpendicular to the line of sight, and observe whether the intersection of the telescope crosshairs stays within the image of the outer circle of the test target.

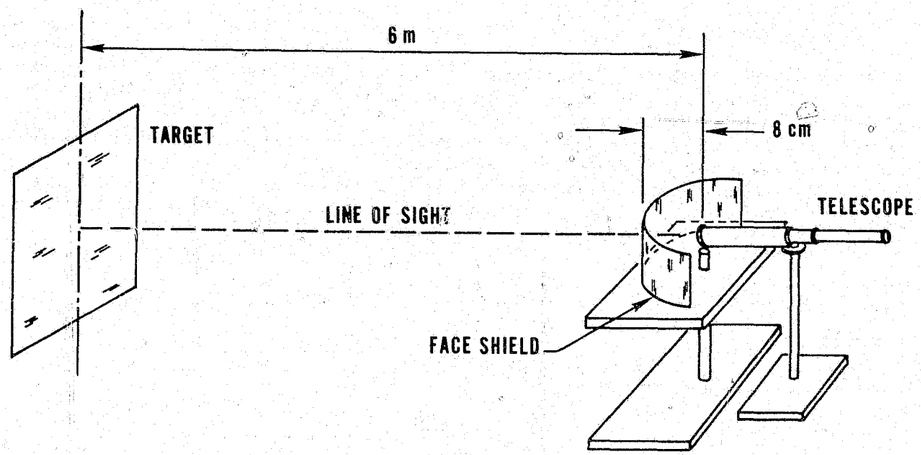

FIGURE 9. *Setup for the prismatic power, refractive power, and resolving power tests.*

5.2.3 Refractive Power and Resolving Power Test

Use the test setup shown in figure 9, but replace the prismatic power test target with an NBS Resolution Test Chart 1952 [3]. With no test specimen in the line of sight, place a standard +1/8 diopter lens immediately in front of the objective lens of the telescope, focus the telescope on the test chart and mark a line on the draw tube to indicate the position of best focus. Replace the +1/8 diopter lens with a −1/8 diopter lens and again focus the telescope and mark the position of best focus on the draw tube. The two lines on the draw tube mark the limits of acceptable refractive power (−1/8 to +1/8 diopter).

Remove the −1/8 diopter lens and position the face shield so that the center of its primary visual area is normal to the line of sight. Focus the telescope and observe whether the portion of best focus falls between the two marks on the draw tube; if it does, the face shield passes the refractive power test. Also observe whether the series of lines marked "34" are resolved as separate lines; if they are, the face shield passes the resolving power test.

5.2.4 Impact Protection and Fastening System Test

5.2.4.1 Test Equipment

5.2.4.1.1 Test Headform

The test headform shall be size 7-1/4, made of a rigid material such as epoxy, have the dimensions shown in figure 10, and be fitted with two contact sensors as shown in details A and B.

5.2.4.1.2 Contact Indicator

The contact indicator shall indicate when electrical contact of 1-ms duration or longer has been made between the conductive surface of the face shield and either one of the test headform contact sensors.

5.2.4.1.3 Impactor

The impactor shall be a steel cylinder 45 mm in diameter with a hemispherical surface on one end. The mass of the impactor shall be 1000+45−0 g.

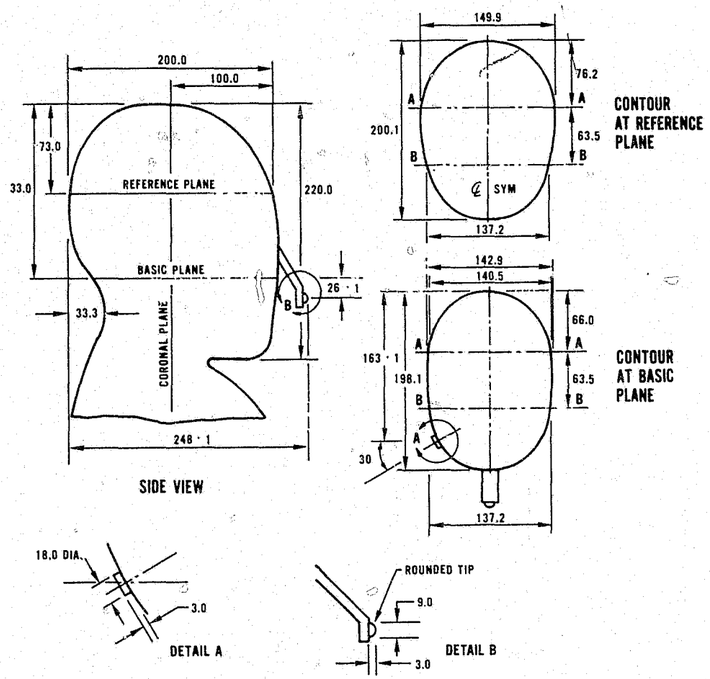

FIGURE 10. *Impact protection and fastening system test headform, dimensions in millimeters.*

5.2.4.2 Test Procedure

Set up the test equipment as shown in figure 11. Line the concave surface of each face shield with a conductive material such as heavy-duty aluminum foil, attach the face shield to a helmet in accordance with the manufacturer's instructions, and leave it attached throughout the preconditioning and testing.

Precondition one each of the three face shields comprising the test sample to room temperature, low temperature, and high temperature, respectively, in accordance with section 5.1.4.2. Begin testing immediately after removing the face shield from the conditioning environment. After 5 min of testing return the face shield to the conditioning environment for at least 15 min, and continue this alternation until the testing is completed.

Position a helmet, with one of the three preconditioned face shields attached, squarely on the test headform, and fasten the chin strap securely. Electrically connect the face shield liner, through the contact indicator, to each of the two test headform contact sensors. Position the helmeted test headform face up, with its coronal plane horizontal and its midsagittal plane vertical, and support it firmly. Suspend the impactor inside the vertical drop tube 80+1−0 cm above the face shield, with its hemispherical end facing down, directly above the contact sensor on the nose of the headform. Impact the face shield by releasing the impactor and allowing it to fall freely. Observe whether or not the contact indicator indicates that the face shield had made electrical contact with the headform contact sensor.

Reposition the face shield if necessary and impact it a second time in the same area. Repeat the above procedure for the remaining two face shield specimens.

Reposition the helmeted test headform side up and head tilted down, with its coronal plane vertical, its midsagittal plane at an angle of 30° with the horizontal and the side contact sensor directly under the impactor. Repeat the testing as described above.

Observe whether or not each face shield remained attached to the helmet by all of its fasteners after each of the impacts delivered during this test.

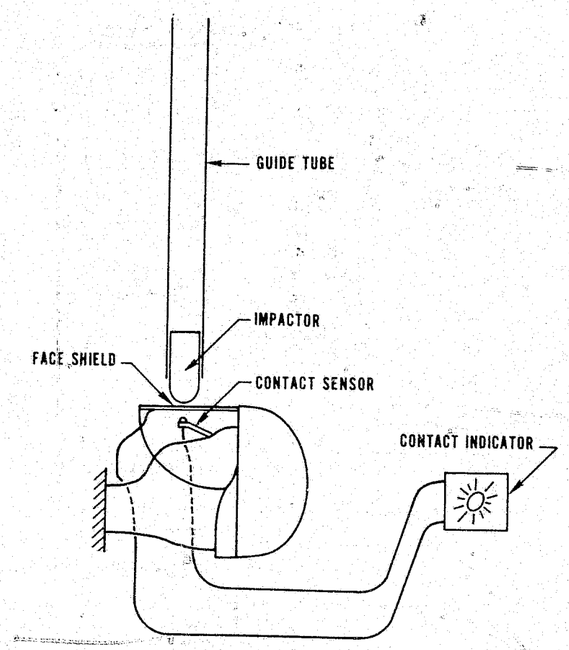

FIGURE 11. *Impact protection and fastening system test setup.*

APPENDIX A—REFERENCES

[1] Crash helmets. NIJ Standard-0105.01. National Institute of Justice, U.S. Department of Justice, Washington, DC 20531.

[2] Ballistic helmets. NIJ Standard-0106.01; 1981 December. National Institute of Justice, U.S. Department of Justice, Washington, DC 20531.

[3] Washer, E.; Gardner, I. C. NBS resolution test chart 1952, presented in Method for determining the resolving power of photographic lenses. Natl. Bur. Stand. (U.S.) Spec. Publ. 374; 1973 June. Available from the Superintendent of Documents, U.S. Government Printing Office, Washington, DC 20402; Stock No. 0303-01061.

[4] Recommended practice for instrumentation for impact tests. SAE J211b; 1974 December. Society of Automotive Engineers, Inc., New York, NY 10001.

[5] Principles of light measurements. CIE No. 18 (E-1.2); 1970. Commission Internationale de L'Eclairage, 4, Ave. du Recteur Poincare, 75-Paris 16, France.

*US GOVERNMENT PRINTING OFFICE: 1985-461-539/23768

National Institute of Justice
James K. Stewart
Director

National Institute of Justice
Advisory Board

Dean Wm. Roach, *Chairman*
Commissioner
Pennsylvania Crime Commission
St. Davids, Pa.

Donald Baldwin, *Vice Chairman*
Executive Director
National Law Enforcement Council
Washington, D.C.

James Duke Cameron
Justice
Arizona Supreme Court
Phoenix, Ariz.

Frank Carrington
Executive Director
Victims' Assistance Legal Organization
Virginia Beach, Va.

Donald L. Collins
Attorney
Collins and Alexander
Birmingham, Ala.

Harold Daitch
Attorney, partner
Leon, Weill and Mahony
New York City

Gavin de Becker
Public Figure Protection Consultant
Los Angeles, Calif.

Priscilla H. Douglas
Manager, Quality Systems
Pontiac Motor Division
General Motors Corporation
Pontiac, Mich.

John Duffy
Sheriff
San Diego, Calif.

George D. Haimbaugh, Jr.
Robinson Professor of Law
University of South Carolina Law School
Columbia, S.C.

Richard L. Jorandby
Public Defender
Fifteenth Judicial Circuit of Florida
West Palm Beach, Fla.

Joan Lipsky
Attorney
Shuttleworth and Engalsoll
Cedar Rapids, Iowa

Mitch McConnell
County Judge/Executive
Jefferson County
Louisville, Ky.

Guadalupe Quintanilla
Assistant Provost
University of Houston
Houston, Texas

Frank K. Richardson
Associate Justice—retired
California Supreme Court
San Francisco, Calif.

Bishop L. Robinson
Commissioner
Baltimore Police Department
Baltimore, Md.

James B. Roche
U.S. Marshal
Boston, Mass.

Roberta Rose Roper
Founder, Stephanie Roper Foundation
Cheverly, Md.

Judy Baar Topinka
Member
Illinois State Legislature
Springfield, Ill.

H. Robert Wientzen
Manager
Field Advertising Department
Procter and Gamble
Cincinnati, Ohio

END