If you have issues viewing or accessing this file contact us at NCJRS.gov.

U.S. Department of Justice
Office of Justice Programs
National Institute of Justice

National Institute of Justice / *Technology Assessment*

Body-Worn FM Transmitters

NIJ Standard-0214.01

ABOUT THE TECHNOLOGY ASSESSMENT PROGRAM

The Technology Assessment Program is sponsored by the Office of Development, Testing, and Dissemination of the National Institute of Justice (NIJ), U.S. Department of Justice. The program responds to the mandate of the Justice System Improvement Act of 1979, which created NIJ and directed it to encourage research and development to improve the criminal justice system and to disseminate the results to Federal, State, and local agencies.

The Technology Assessment Program is an applied research effort that determines the technological needs of justice system agencies, sets minimum performance standards for specific devices, tests commercially available equipment against those standards, and disseminates the standards and the test results to criminal justice agencies nationwide and internationally.

The program operates through:

The *Technology Assessment Program Advisory Council* (TAPAC) consisting of nationally recognized criminal justice practitioners from Federal, State, and local agencies, which assesses technological needs and sets priorities for research programs and items to be evaluated and tested.

The *Law Enforcement Standards Laboratory* (LESL) at the National Institute of Standards and Technology, which develops voluntary national performance standards for compliance testing to ensure that individual items of equipment are suitable for use by criminal justice agencies. The standards are based upon laboratory testing and evaluation of representative samples of each item of equipment to determine the key attributes, develop test methods, and establish minimum performance requirements for each essential attribute. In addition to the highly technical standards, LESL also produces user guides that explain in nontechnical terms the capabilities of available equipment.

The *Technology Assessment Program Information Center* (TAPIC), operated by a grantee, which supervises a national compliance testing program conducted by independent agencies. The standards developed by LESL serve as performance benchmarks against which commercial equipment is measured. The facilities, personnel, and testing capabilities of the independent laboratories are evaluated by LESL prior to testing each item of equipment, and LESL helps the Information Center staff review and analyze data. Test results are published in Consumer Product Reports designed to help justice system procurement officials make informed purchasing decisions.

Publications issued by the National Institute of Justice, including those of the Technology Assessment Program, are available from the National Criminal Justice Reference Service (NCJRS), which serves as a central information and reference source for the Nation's criminal justice community. For further information, or to register with NCJRS, write to the National Institute of Justice, National Criminal Justice Reference Service, Washington, DC 20531.

James K. Stewart, Director
National Institute of Justice

The Assistant Attorney General, Office of Justice Programs, coordinates the activities of the following program Offices and Bureaus: National Institute of Justice, Bureau of Justice Statistics, Bureau of Justice Assistance, Office of Juvenile Justice and Delinquency Prevention, and Office for Victims of Crime.

U.S. Department of Justice
Office of Justice Programs
National Institute of Justice

Body-Worn FM Transmitters

NIJ Standard-0214.01

Supersedes NILECJ-STD-0214.00 dated December 1978

January 1990

U.S. DEPARTMENT OF JUSTICE
National Institute of Justice

James K. Stewart, Director

The technical effort to develop this standard was conducted under Interagency Agreement LEAA-J-IAA-021-3, Project No. 8904.

ACKNOWLEDGMENTS

This standard was formulated by the Law Enforcement Standards Laboratory (LESL) of the National Institute of Standards and Technology (NIST) (formerly the National Bureau of Standards) under the direction of Marshall J. Treado, Program Manager for Communications Systems, and Lawrence K. Eliason, Chief of LESL. NBS Electromagnetics Division staff members responsible for the preparation of the original standard were Harold E. Taggart, project manager, Raymond N. Jones, Leon F. Saulsbury, and John L. Workman. Harold E. Taggart formulated this revision of the standard. The preparation of this standard was sponsored by the National Institute of Justice, Lester D. Shubin, Director, Science and Technology. The standard has been reviewed and approved by the Technology Assessment Program Advisory Council.

FOREWORD

This document, NIJ Standard-0214.01, Body-Worn FM Transmitters, is an equipment standard developed by the Law Enforcement Standards Laboratory of the National Institute of Standards and Technology (formerly the National Bureau of Standards). It is produced as part of the Technology Assessment Program of the National Institute of Justice. A brief description of the program appears on the inside front cover.

This standard is a technical document that specifies performance and other requirements equipment should meet to satisfy the needs of criminal justice agencies for high quality service. Purchasers can use the test methods described in this standard to determine whether a particular piece of equipment meets the essential requirements, or they may have the tests conducted on their behalf by a qualified testing laboratory. Procurement officials may also refer to this standard in their purchasing documents and require that equipment offered for purchase meet the requirements. Compliance with the requirements of the standard may be attested to by an independent laboratory or guaranteed by the vendor.

Because this NIJ standard is designed as a procurement aid, it is necessarily highly technical. For those who seek general guidance concerning the selection and application of law enforcement equipment, user guides have also been published. The guides explain in nontechnical language how to select equipment capable of the performance required by an agency.

NIJ standards are subjected to continuing review. Technical comments and recommended revisions are welcome. Please send suggestions to Lester D. Shubin, Director, Science and Technology, National Institute of Justice, U.S. Department of Justice, Washington, DC 20531.

Before citing this or any other NIJ standard in a contract document, users should verify that the most recent edition of the standard is used. Write to: Chief, Law Enforcement Standards Laboratory, National Institute of Standards and Technology, Gaithersburg, MD 20899.

Lester D. Shubin
Director, Science and Technology
National Institute of Justice

NIJ STANDARD
FOR
BODY-WORN FM TRANSMITTERS

CONTENTS

	Page
FOREWORD	iii
1. PURPOSE AND SCOPE	1
2. CLASSIFICATION	1
3. DEFINITIONS	1
4. REQUIREMENTS	3
4.1 Transmitter Performance	3
4.2 User Information	3
4.3 Radio Frequency Carrier Characteristics	4
4.4 Audiofrequency Modulation Characteristics	4
4.5 Electromagnetic Compatibility Characteristics	5
4.6 Battery Service Life	6
5. TEST METHODS	6
5.1 Standard Test Conditions	6
5.2 Test Equipment	7
5.3 Radio Frequency Carrier Tests	8
5.4 Audiofrequency Modulation Tests	10
5.5 Electromagnetic Compatibility Tests	12
5.6 Battery Service Life Test	14
APPENDIX A—REFERENCES	15
APPENDIX B—BIBLIOGRAPHY	16

COMMONLY USED SYMBOLS AND ABBREVIATIONS

A	ampere	H	henry	nm	nanometer
ac	alternating current	h	hour	No.	number
AM	amplitude modulation	hf	high frequency	o.d.	outside diameter
cd	candela	Hz	hertz (c/s)	Ω	ohm
cm	centimeter	i.d.	inside diameter	p.	page
CP	chemically pure	in	inch	Pa	pascal
c/s	cycle per second	ir	infrared	pe	probable error
d	day	J	joule	pp.	pages
dB	decibel	L	lambert	ppm	part per million
dc	direct current	L	liter	qt	quart
°C	degree Celsius	lb	pound	rad	radian
°F	degree Fahrenheit	lbf	pound-force	rf	radio frequency
diam	diameter	lbf·in	pound-force inch	rh	relative humidity
emf	electromotive force	lm	lumen	s	second
eq	equation	ln	logarithm (natural)	SD	standard deviation
F	farad	log	logarithm (common)	sec.	section
fc	footcandle	*M*	molar	SWR	standing wave radio
fig.	figure	m	meter	uhf	ultrahigh frequency
FM	frequency modulation	min	minute	uv	ultraviolet
ft	foot	mm	millimeter	V	volt
ft/s	foot per second	mph	mile per hour	vhf	very high frequency
g	acceleration	m/s	meter per second	W	watt
g	gram	N	newton	λ	wavelength
gr	grain	N·m	newton meter	wt	weight

area = unit^2 (e.g., ft^2, in^2, etc.); volume = unit^3 (e.g., ft^3, m^3, etc.)

PREFIXES

d	deci (10^{-1})	da	deka (10)
c	centi (10^{-2})	h	hecto (10^2)
m	milli (10^{-3})	k	kilo (10^3)
μ	micro (10^{-6})	M	mega (10^6)
n	nano (10^{-9})	G	giga (10^9)
p	pico (10^{-12})	T	tera (10^{12})

COMMON CONVERSIONS
(See ASTM E380)

ft/s × 0.3048000 = m/s	lb × 0.4535924 = kg
ft × 0.3048 = m	lbf × 4.448222 = N
ft·lbf × 1.355818 = J	lbf/ft × 14.59390 = N/m
gr × 0.06479891 = g	lbf·in × 0.1129848 = N·m
in × 2.54 = cm	lbf/in^2 × 6894.757 = Pa
kWh × 3 600 000 = J	mph × 1.609344 = km/h
	qt × 0.9463529 = L

Temperature: $(T_{°F} - 32) \times 5/9 = T_{°C}$

Temperature: $(T_{°C} \times 9/5) + 32 = T_{°F}$

NIJ STANDARD FOR BODY-WORN FM TRANSMITTERS

1. PURPOSE AND SCOPE

The purpose of this document is to establish performance requirements and methods of test for body-worn frequency modulated transmitters of 3 watts or less used by law enforcement agencies. This revision modifies the method of test for radiated spurious emission measurements, however, the performance requirement remains unchanged.

2. CLASSIFICATION

For the purposes of this standard, FM transmitters are classified by their operating frequencies.

2.1 Type I

Transmitters which operate in the 25–50 MHz band.

2.2 Type II

Transmitters which operate in the 150–174 MHz band.

2.3 Type III

Transmitters which operate in the 400–512 MHz band.

3. DEFINITIONS

The principal terms used in this document are defined in this section. Additional definitions relating to law enforcement communications are given in LESP-RPT-0203.00, Technical Terms and Definitions Used with Law Enforcement Communications Equipment (Radio Antennas, Transmitters, and Receivers) [1].[1]

3.1 AM Hum and Noise

The amplitude modulation present on an unmodulated carrier.

3.2 Audiofrequency Harmonic Distortion

Nonlinear distortion characterized by the appearance in the output of integral multiples of an audiofrequency input signal.

3.3 Audiofrequency Response

The degree of precision with which the frequency deviation of a transmitter responds to a designated audiofrequency signal level.

---

[1] Numbers in brackets refer to the references in appendix A.

3.4 Authorized Bandwidth

The maximum width of the band of frequencies specified by the Federal Communications Commission to be occupied by an emission, i.e., 20 kHz for public safety agencies [2].

3.5 Carrier Output Power

For a transmitter, the radiofrequency power available at the antenna terminal when no modulating signal is present.

3.6 FM Hum and Noise

The frequency modulation present on an unmodulated carrier.

3.7 Frequency Deviation

In frequency modulation, the difference between the instantaneous frequency of a modulated carrier and the unmodulated carrier frequency.

3.8 Frequency Stability

The ability of a transmitter to maintain an assigned carrier frequency.

3.9 Modulation Limiting

That action, performed within an FM transmitter, which intentionally restricts the signal to the required spectral limits.

3.10 Nominal Value

The numerical value of a device characteristic as specified by the manufacturer.

3.11 Occupied Bandwidth

The width of the frequency band containing those frequencies at which a total of 99 percent of the radiated power appears, extended to include any discrete frequency at which the power is at least 0.25 percent of the total radiated power.

3.12 Rated Capacity, Battery

A designation by the battery manufacturer which indicates the approximate capacity, in ampere-hours or milliampere-hours, at typical discharge rates.

3.13 Sampler

A series device which couples energy over a broad frequency range from a transmission line into a third port. The attenuated output signal from the third port has the same waveform as the original signal.

3.14 Service Life

The length of time that a primary cell (or battery) or a fully charged secondary cell (or battery) will provide satisfactory service under specified conditions.

3.15 Sideband Spectrum

The emissions generated by a modulated transmitter that are within 250 percent of the authorized bandwidth, i.e., ±25 kHz.

3.16 SINAD Ratio

A measure of the audio output of a receiver, expressed in decibels, equal to the ratio of (1) signal plus noise plus distortion to (2) noise plus distortion; from *SI*gnal *N*oise *A*nd *D*istortion ratio.

3.17 Spurious Emission

Any part of the radiofrequency output that is not a component of the theoretical output or exceeds the authorized bandwidth.

3.18 Standing Wave Ratio (SWR)

The ratio of the maximum to the minimum voltage or current appearing along a transmission line.

3.19 Transmitter Efficiency

The ratio of (1) the rf output power delivered to a standard output load to (2) the dc input power to the transmitter.

4. REQUIREMENTS

4.1 Transmitter Performance

The transmitter performance shall meet or exceed the requirements for each characteristic as given below and in table 1. These performance requirements meet or exceed those given in the Rules and Regulations of the Federal Communications Commission (FCC). In addition to the requirements listed, all of the licensing and operating requirements of the FCC Rules and Regulations shall apply.

TABLE 1. *Minimum performance requirements for body-worn FM transmitters.*

	Requirements		
Transmitter characteristic	*Type I 25–50 MHz*	*Type II 150–175 MHz*	*Type III 400–512 MHz*
Radio frequency carrier characteristics			
A. Carrier output power variance	−0.5, +3 dB	−0.5, +3 dB	−0.5, +3 dB
B. Output power variance (supply voltage varied ±10%)	±3 dB	±3 dB	±3 dB
C. Output power variance (supply voltage varied −20%)	±6 db	±6 dB	±6 dB
D. Carrier frequency tolerance	0.002%	0.003%	0.003%
E. Frequency stability (supply voltage varied ±15%)	0.002%	0.003%	0.003%
F. AM hum and noise attenuation	34 dB	34 dB	34 dB
G. Transmitter efficiency	30%	40%	40%
Audiofrequency modulation characteristics			
H. Audiofrequency harmonic distortion	5%	5%	5%
I. FM hum and noise attenuation	40 dB	40 dB	40 dB
J. Frequency deviation	10%	10%	10%
Electromagnetic compatibility characteristics			
K. Radiated spurious emissions	43 dB	43 dB	43 dB
L. Sideband spectrum (±10 kHz frequency separation)	25 dB	25 dB	25 dB
M. Sideband spectrum (±20 kHz frequency separation)	50 dB	60 dB	60 dB
Battery characteristic			
N. Service life	90%	90%	90%

4.2 User Information

4.2.1 Transmitter

Nominal values for the carrier output power, carrier frequency, transmit current and each transmitter characteristic addressed in this standard shall be included in the information supplied to the purchaser by the

manufacturer or distributor. The manufacturer shall specify the required battery voltage, indicate the magnitude of the audio input signal necessary for rated system deviation and provide sufficient audio input impedance information to enable test personnel to design an impedance matching network for use between the audio generator and transmitter audio input circuits.

4.2.2 Battery

A nominal value for the service life of each battery shall be included in the information supplied to the purchaser by the transmitter manufacturer or distributor. In addition, the manufacturer or distributor shall label each battery to include:

a) nominal voltage
b) battery type and model
c) rated capacity
d) indication of polarity
e) indication if battery is rechargeable
f) month and year of manufacture

4.3 Radio Frequency Carrier Characteristics

The radio frequency carrier characteristics of output power, frequency stability, AM hum and noise level and transmitter efficiency shall be measured in accordance with section 5.3.

4.3.1 Output Power

Transmitter input power is specified by the FCC [2]. The carrier output power delivered to a standard output load shall be within −0.5, +3 dB (Item A, table 1) of the nominal value at all times except for the initial 1 second after applying power. When the standard supply voltage is varied plus and minus 10 percent, the output power shall not vary more than ±3 dB (Item B). When the standard supply voltage is varied −20 percent, the output shall not vary more than ±6 dB (Item C).

4.3.2 Frequency Stability

The carrier frequency shall be within (Item D) of the assigned value at all times during the standard duty cycle except for the initial 1 second after applying power. When the standard supply voltage is varied plus and minus 15 percent, the frequency stability shall be (Item E).

4.3.3 AM Hum and Noise Level

The AM hum and noise level shall be attenuated a minimum of 34 dB (Item F) below the unmodulated nominal carrier output power level.

4.3.4 Transmitter Efficiency

The transmitter efficiency shall be (Item G) or greater.

4.4 Audiofrequency Modulation Characteristics

The audiofrequency modulation characteristics of harmonic distortion, FM hum and noise level, audiofrequency response, frequency deviation and modulation limiting shall be measured in accordance with section 5.4.

4.4.1 Audiofrequency Harmonic Distortion

The maximum audiofrequency harmonic distortion shall be 5 percent (Item H).

4.4.2 FM Hum and Noise Level

The FM hum and noise level shall be attenuated a minimum of 40 dB (Item I).

4.4.3 Audiofrequency Response

The audiofrequency response shall not vary more than +1, −3 dB from a true 6 dB per octave pre-emphasis characteristic from 0.3 to 3 kHz as referred to the 1 kHz level, as shown in figure 1, with the exception that a 6 dB per octave roll-off from 600 to 300 Hz and from 2.5 to 3 kHz may be present.

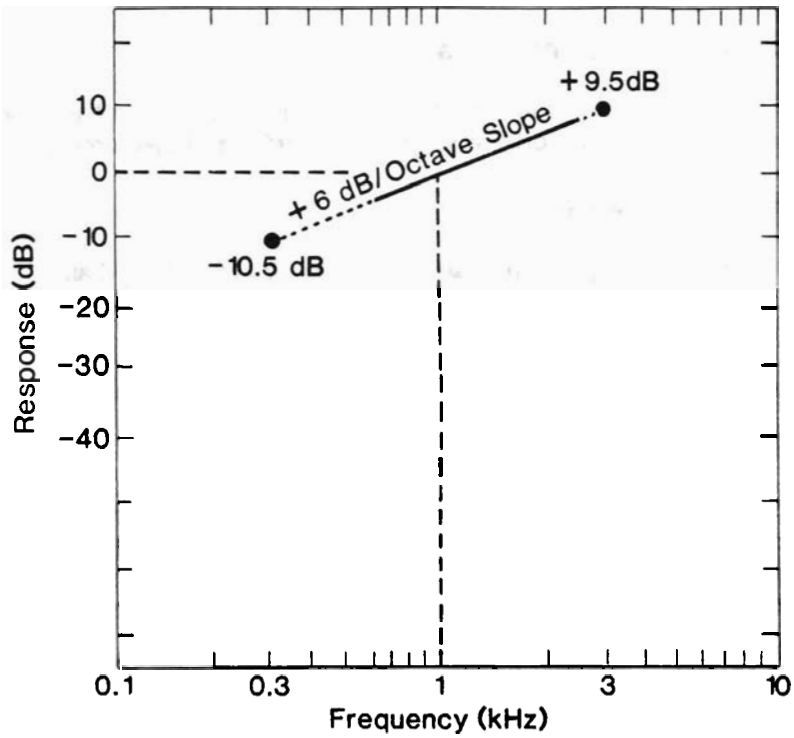

FIGURE 1. *Audiofrequency response characteristic of transmitters.*

4.4.4 Frequency Deviation

The maximum frequency deviation shall be within 10 percent (Item J) of ±4.5 kHz.

4.4.5 Modulation Limiting

The instantaneous peak and steady state frequency deviation shall be within 10 percent (Item J) of ±4.5 kHz with a 20-dB increase in audio above the normal audio input level.

4.5 Electromagnetic Compatibility Characteristics

The electromagnetic compatibility characteristics of radiated spurious emissions and sideband spectrum shall be measured in accordance with section 5.5.

4.5.1 Radiated Spurious Emissions

Each radiated spurious emission shall be attenuated a minimum of 43 dB (Item K) $+10 \log_{10}$ (power output in watts) decibels below the field strength of the carrier.

4.5.2 Sideband Spectrum

Each spurious sideband emission shall be attenuated greater than 25 dB (Item L) when its frequency is separated from the assigned carrier by plus and minus 10 kHz, and shall be attenuated greater than (Item M) when its frequency is separated from the assigned carrier by plus and minus 20 kHz.

4.6 Battery Service Life

The service life of each primary and secondary battery shall be at least 90 percent (Item N) of the nominal service life specified by the manufacturer in accordance with section 4.2.2, when measured in accordance with section 5.6. A random sample of three shall be tested.

5. TEST METHODS

5.1 Standard Test Conditions

Allow all measurement equipment to warm up until the system has achieved sufficient stability to perform the measurement. Unless otherwise specified, perform all measurements under standard test conditions.

5.1.1 Standard Temperature

Standard ambient temperature shall be between 20 and 30 °C (68 and 86 °F).

5.1.2 Standard Relative Humidity

Standard ambient relative humidity shall be between 10 and 85 percent.

5.1.3 Standard Supply Voltage

The standard supply voltage shall be the required battery voltage as specified by the manufacturer in accordance with section 4.2.1 and shall be applied to the transmitter power supply input terminals. Tests may be performed using either a battery of the same type as normally used in the equipment or a well-filtered electronic dc supply. In the latter case, it shall be adjusted to within 1 percent of the voltage required.

5.1.4 Rated System Deviation

Rated system deviation shall be ±5 kHz.

5.1.5 Standard Test Modulations

5.1.5.1 Audiofrequency Test Modulation

Audiofrequency test modulation shall be 1 kHz (from a source with distortion less than 1%) at the level required to produce 60 percent of rated system deviation (i.e., ±3 kHz).

5.1.5.2 Electromagnetic Compatibility Test Modulation

Electromagnetic compatibility test modulation shall be a 2.5 kHz sine wave at an input level 16 dB greater than that required to produce 50 percent of rated system deviation at 1 kHz.

5.1.6 Standard Test Site

The standard test site shall be located on level ground which has uniform electrical characteristics (a metal ground plane is recommended but not mandatory if the ground constants are uniform). Reflecting objects (especially large metal objects), trees, buildings and other objects which would perturb the electromagnetic fields to be measured should not be located near the test site. The test site shall be designed so that the distance between the equipment under test and the receiving antenna is 10 m. The recommended layout of the test site is illustrated in figure 2. The area within the elliptical boundary must be free of any perturbing objects. Objects outside the elliptical boundary such as buildings or automobiles may affect the measurements so caution must be used when selecting the location of the test site.

An alternative site may be used for radiated electromagnetic emissions (EME) measurements provided that the results are correlated satisfactorily to those that would be obtained on an open area test site. A shielded room is not acceptable for making radiated EME measurements unless it is properly lined with EME absorbing material to eliminate reflections of emissions.

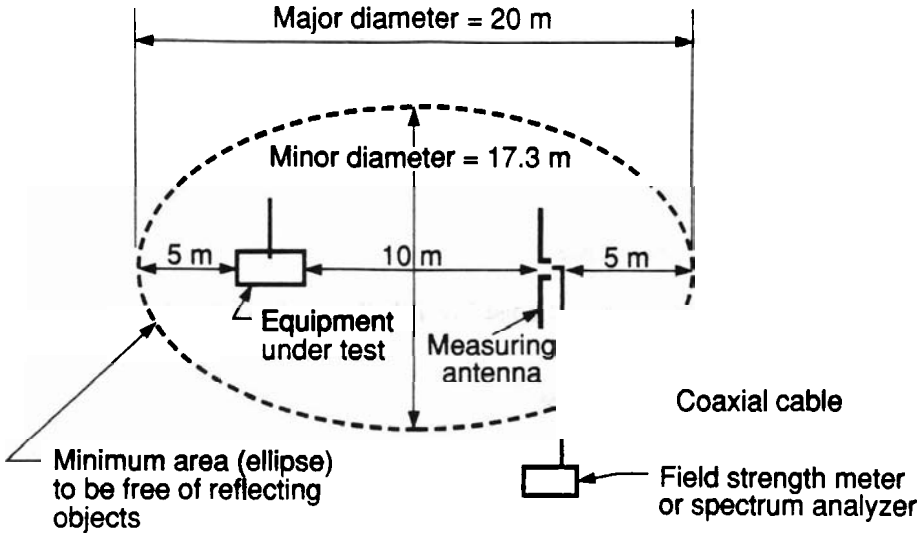

FIGURE 2. *Standard test site layout.*

A ground screen is highly recommended, but not mandatory for measurement of radiated EME. Open area test sites are likely to need a ground screen when any of the following conditions exist at the site:

1) The terrain is discontinuous.
2) The terrain is subject to extreme seasonal variations in ground conductivity.
3) There are unburied power or control cables on the site.
4) The site is located on pavement.

5.1.7 Standard Duty Cycle

Standard duty cycle shall be continuous operation of the transmitter.

5.1.8 Standard Test Frequency

The standard test frequency shall be the transmitter operating frequency.

5.2 Test Equipment

The test equipment discussed in this section is limited to that equipment which is the most critical in making the measurements discussed in this standard. All other test equipment shall be of comparable quality.

5.2.1 Test Receiver

The test receiver shall include a standard audio output load as specified by the manufacturer of the test receiver (sec. 5.2.1.6) and shall have the characteristics specified in the following sections.

5.2.1.1 Audio Response

The audio response characteristics shall not vary more than 1 dB from a 750 μs de-emphasis characteristic when the system deviation is held constant and the modulation frequency is varied between 0.05 and 3 kHz.

5.2.1.2 Harmonic Distortion

The audiofrequency distortion shall be less than 1 percent at standard modulation. The harmonic distortion at 1 kHz (for larger than rated system deviation) shall be less than 3 percent. The harmonic distortion shall be measured when the test receiver is tuned to a nominal 1 mV rf source which is modulated by a sine wave at a level which produces a system deviation 50 percent greater than rated system deviation (i.e., ±7.5 kHz).

5.2.1.3 Audio Hum and Noise Level

The unsquelched audio hum and noise level shall be at least 55 dB below the audio output power when measured with a 1 mV input signal.

5.2.1.4 Adjacent Channel Interference

The test receiver shall differentiate by 85 dB or more between a desired modulated signal and a modulated adjacent channel signal 30 kHz on either side, when the adjacent channel interference degrades the desired signal from 12 to 6 dB SINAD.

5.2.1.5 Selectivity

The test receiver shall have a bandwidth of 24 to 30 kHz at the −80 dB points.

5.2.1.6 Standard Audio Output Load

The standard audio output load shall consist of a resistor whose resistance is equal to the impedance of the load into which the test receiver normally operates.

5.2.2 Deviation Meter

The deviation meter shall be capable of measuring the peak deviation of a modulating waveform with an uncertainty no greater than 5 percent of the deviation being monitored.

5.2.3 Standard Audio Input Load

The standard audio input load shall consist of a low-noise resistor whose resistance is equal to the specified input impedance of the transmitter.

5.2.4 Standard RF Output Load

The standard rf output load shall be a 50-Ω resistive termination having a standing wave ratio (SWR) of 1.1 or less at the standard test frequencies. If connectors and cables are used to attach the standard output load to the transmitter, the combined SWR, including the load, shall be 1.1 or less.

5.2.5 Band Rejection Filter

The band rejection filter shall have a minimum insertion loss of 40 dB for all frequencies within ±0.01 percent of the carrier frequency.

5.3 Radio Frequency Carrier Tests

5.3.1 Output Power Test

Operate the transmitter without modulation. Measure the output power as shown in figure 3, using standard supply voltage and a power meter accurate to 5 percent. Change the standard supply voltage plus 10 percent, allow it to stabilize at least 15 s, and determine the output power. Repeat this for changes in standard supply voltage of minus 10 percent and minus 20 percent.

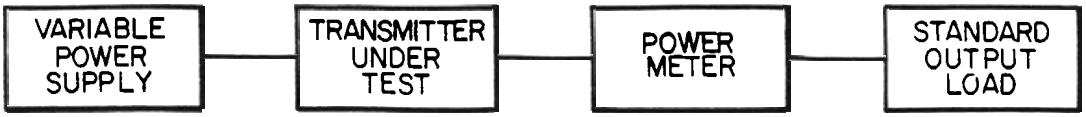

FIGURE 3. *Block diagram for output power measurement.*

5.3.2 Frequency Stability Test

Operate the transmitter without modulation. Measure the frequency as shown in figure 4, using standard supply voltage. Change the standard supply voltage plus 15 percent, allow it to stabilize for 15 s, and determine the change in frequency. Repeat this for a change in standard supply voltage of minus 15 percent.

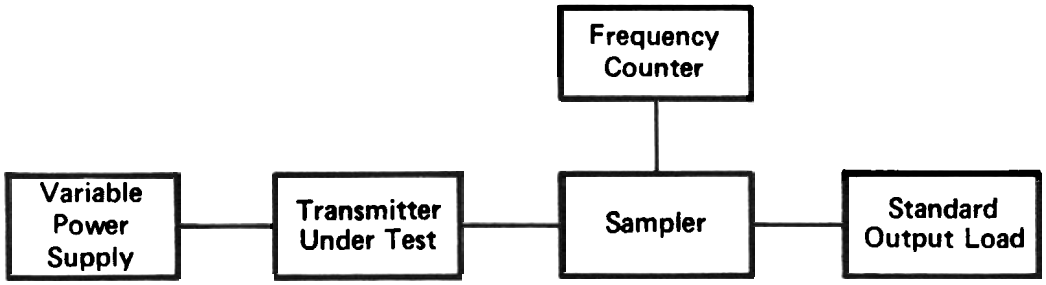

FIGURE 4. *Block diagram for frequency stability measurement.*

5.3.3 AM Hum and Noise Level Test

Interconnect the transmitter and test equipment as shown in figure 5. Use a linear peak-carrier responsive AM detector to detect the sampled output of the transmitter. With the transmitter operating at rated power with no modulation, measure the dc voltage across the detector load resistor with the high-impedance dc voltmeter. Without adjusting the transmitter, measure the peak ac voltage with the oscilloscope. Calculate the AM hum and noise level as 20 $\log_{10}$ (V_p/V_{dc}), where V_p is the peak ac voltage and V_{dc} is the dc voltage.

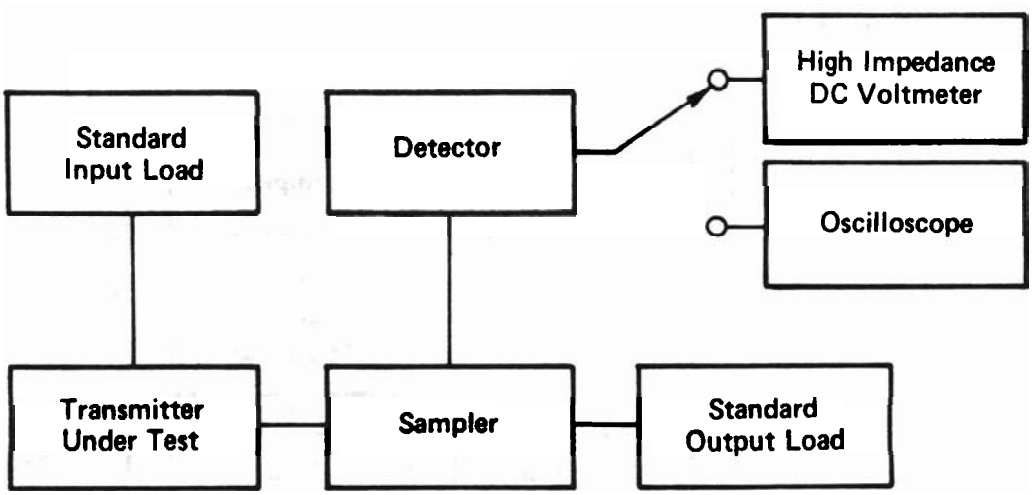

FIGURE 5. *Block diagram for AM hum and noise measurement.*

5.3.4 Transmitter Efficiency Test

Interconnect the transmitter and test equipment as shown in figure 6. Adjust the dc power supply until the dc voltmeter indicates the standard supply voltage. Record the CW output power and direct current.

Calculate the transmitter efficiency as

$100 \cdot P_{rf}/V \cdot A$

where

P_{rf} = the output power in watts,

V = the standard supply voltage in volts, and

A = the direct current in amperes.

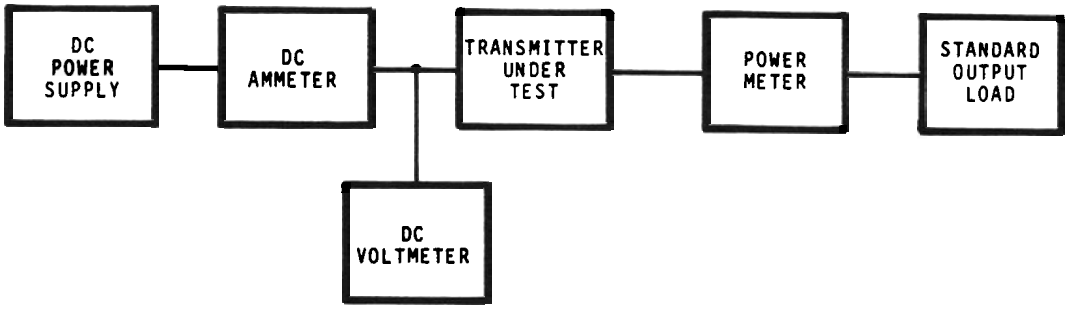

FIGURE 6. *Block diagram for transmitter efficiency measurement.*

5.4 Audiofrequency Modulation Tests

5.4.1 Harmonic Distortion Test

Interconnect the transmitter and test equipment as shown in figure 7. Operate the transmitter at nominal carrier output power and adjust the audio oscillator for audiofrequency test modulation (sec. 5.1.5.1), except that the 1 kHz modulating signal shall have a total distortion of 0.5 percent or less. Process the sampled transmitter output with the test receiver (sec. 5.2.1). Use the distortion analyzer, across the standard audio output load, to remove the 1 kHz tone and measure the signal, which is a combination of all the noise and harmonic components.

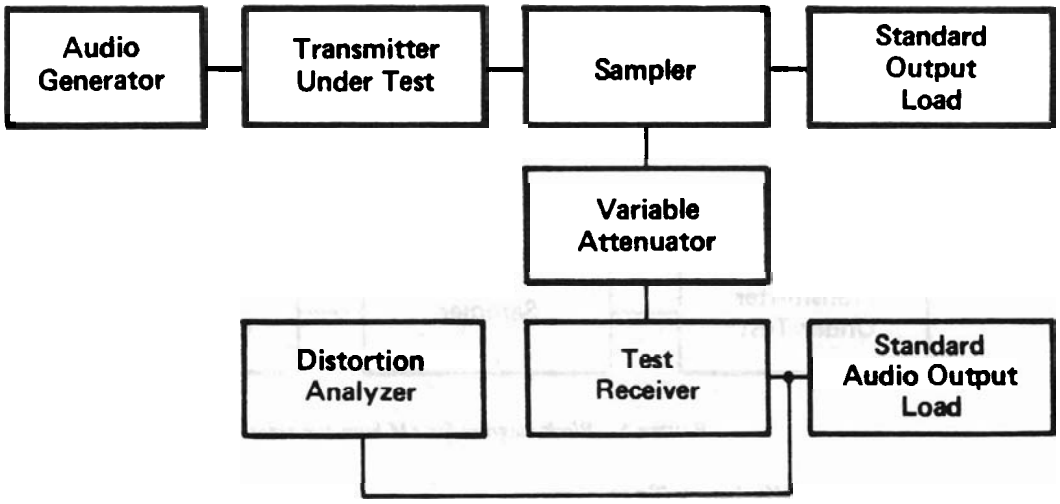

FIGURE 7. *Block diagram for harmonic distortion and FM hum and noise measurements.*

5.4.2 FM Hum and Noise Level Test

Interconnect the transmitter and test equipment as shown in figure 7. Operate the transmitter at nominal carrier output power and adjust the audio oscillator for audiofrequency test modulation. Measure the audio output voltage, V_1, of the test receiver using the distortion analyzer as a voltmeter. Remove the modulation by disconnecting the audio oscillator and connecting the standard audio input load, and measure the resulting audio voltage, V_2, at the distortion analyzer. Calculate the FM hum and noise level as $20 \log_{10} (V_1/V_2)$. The method provides reliable measurements up to 50 dB.

5.4.3 Audiofrequency Response Test

Interconnect the transmitter and test equipment as shown in figure 8. The matching network is a broadband network which matches the audio generator output impedance to the transmitter audio input impedance.

Apply selected audio frequencies from 0.3 to 3 kHz to the transmitter, and maintain the audio input level at constant 30 percent of rated system deviation (i.e., 1.5 kHz) as observed with the deviation meter. Determine the audio voltmeter reading in decibels relative to the voltmeter reading at 1 kHz for each test frequency, and draw a graph similar to that shown in figure 1.

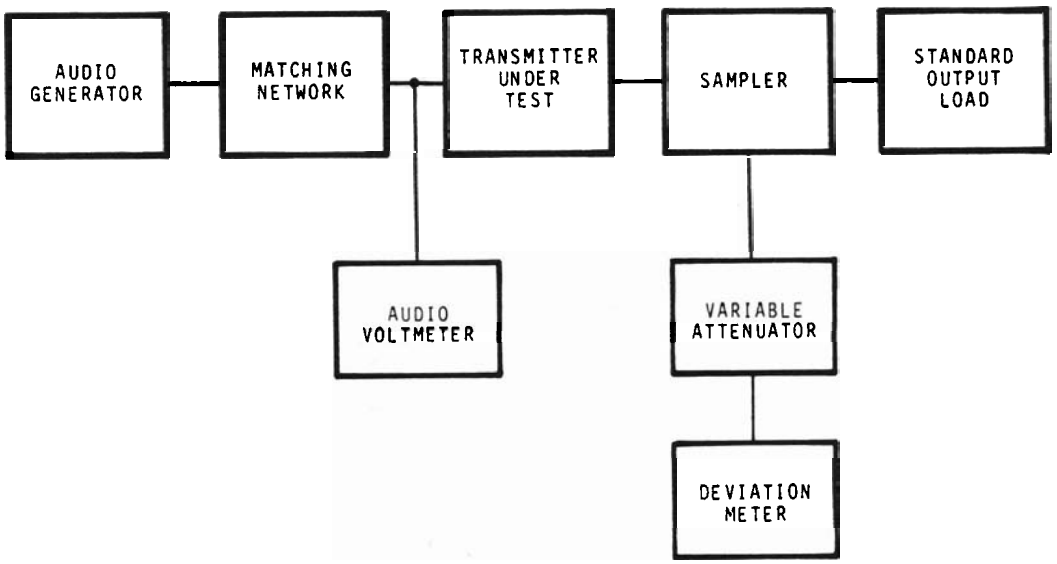

FIGURE 8. *Block diagram for audiofrequency response measurement.*

5.4.4 Frequency Deviation Test

Interconnect the transmitter and test equipment as shown in figure 9 and adjust the transmitter controls for normal operation. Adjust the audio input for audiofrequency test modulation and increase the audio input level until maximum frequency deviation is observed. Measure the frequency deviation with the deviation meter.

5.4.5 Modulation Limiting Test

Interconnect the transmitter and test equipment as shown in figure 9 and adjust the transmitter controls for normal operation. Adjust the audio input for audiofrequency test modulation. Increase the audio input level 20 dB. Hold the audio input level constant, vary the frequency from 0.3 to 3 kHz, and measure the frequency deviation with the deviation meter.

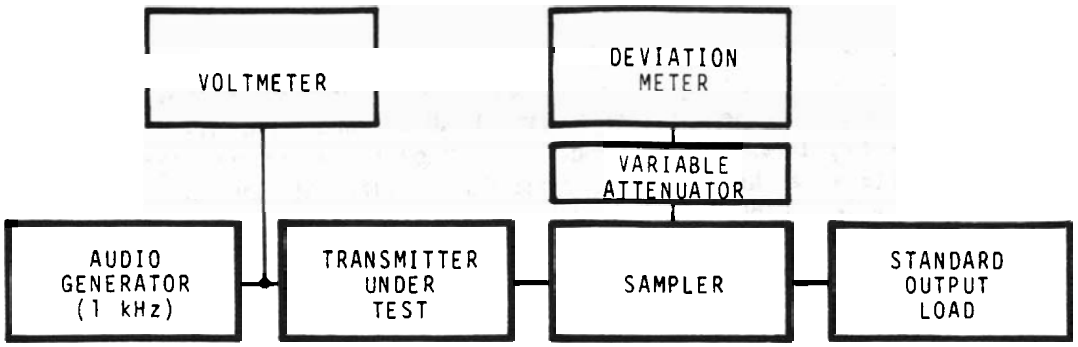

FIGURE 9. *Block diagram for frequency deviation and modulation limiting measurements.*

5.5 Electromagnetic Compatibility Tests

5.5.1 Radiated Spurious Emission Test

Perform measurements at a test site that meets the requirements of section 5.1.6. Set up the equipment as shown in figure 10. Place the transmitter, with antenna connected, on the turntable with a nonmetallic support so that the tip of the antenna is approximately 127 cm (50 in) above the ground plane. Place the halfwave dipole receiving antenna 10 m from the transmitter mounted on the nonmetallic variable search height mast. The nonmetallic mast should permit raising and lowering the antenna from a height of 1 to 4 m (3.3 to 13.2 ft) in an even continuous manner, and permit convenient reorientation of the antenna from horizontal to vertical polarization.

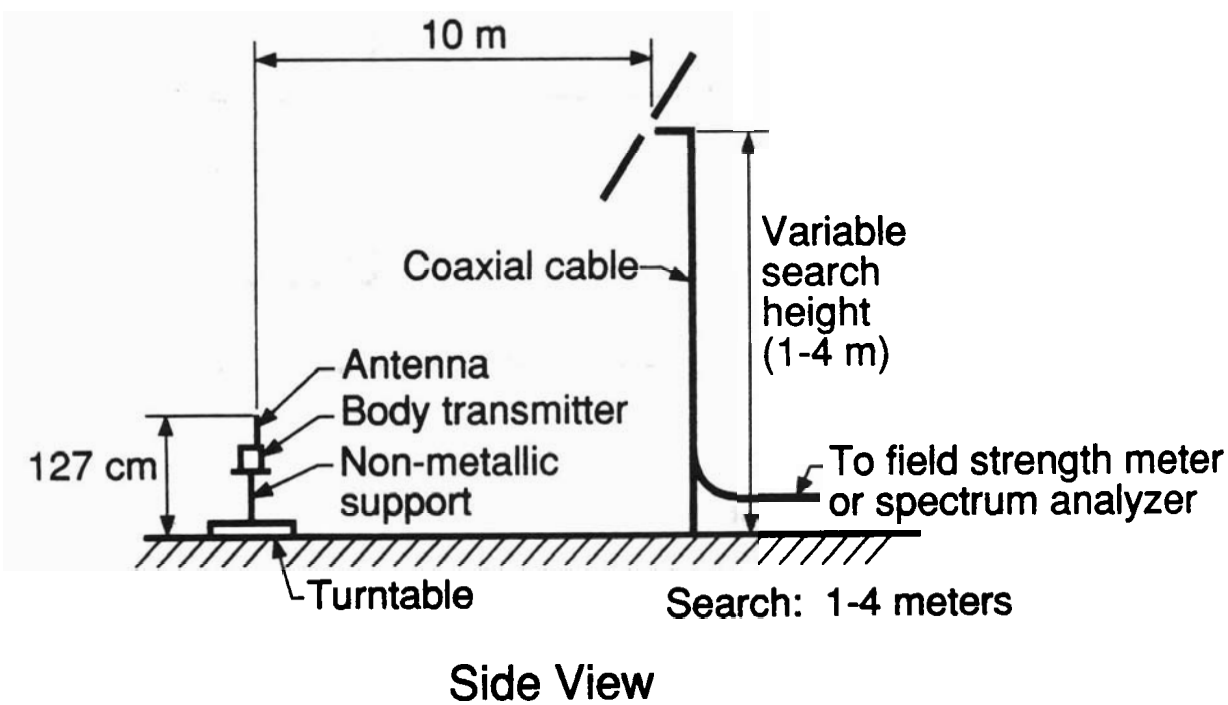

FIGURE 10. *Block diagram for radiated spurious emission measurements.*

Tuned halfwave dipole antennas are recommended for frequencies from 30 to 1000 MHz and linearly polarized horn antennas are recommended for frequencies above 1000 MHz. However, any other type of linearly polarized antenna may be used to make the measurements provided the measurements are correlated satisfactorily with the tuned dipole and both horizontally and vertically polarized measurements can be performed.

Turn on the transmitter and measure the field strength of the unmodulated carrier frequency in decibels above 1 microvolt per meter (dBμV/m) using the technique described in the following section. Then measure the field strength in dBμV/m of the radiated spurious emissions, from the lowest radio frequency generated in the transmitter to the tenth harmonic of the carrier. Adjust the receiving antenna to a half-wavelength for each frequency.

Measure the unmodulated carrier frequency and each spurious emission. Maximize each emission by rotating the turntable through 360°, raising and lowering the vertically polarized antenna from 1 to 4 m (3.3 to 13.2 ft). Repeat this procedure with the receiving antenna in the horizontal position.

The attenuation of each radiated spurious emission is the maximum measured field strength in dBμV/m of the carrier frequency minus the maximum measured field strength in dBμV/m of the radiated spurious emission.

5.5.2 Sideband Spectrum Test

Interconnect the transmitter and test equipment as shown in figure 11. Using the variable attenuator, adjust the unmodulated carrier signal for a full-scale signal of at least 60 dB above the noise as displayed on the spectrum analyzer. Apply electromagnetic compatibility test modulation and measure the average envelope of the resulting spectrum at both plus and minus 10 kHz and plus and minus 20 kHz from the center frequency. Adjust the spectrum analyzer controls so that approximately 50 kHz of transmitter spectrum is centered on the display. The image on the cathode ray tube of the spectrum analyzer should be similar to that shown in figure 12.

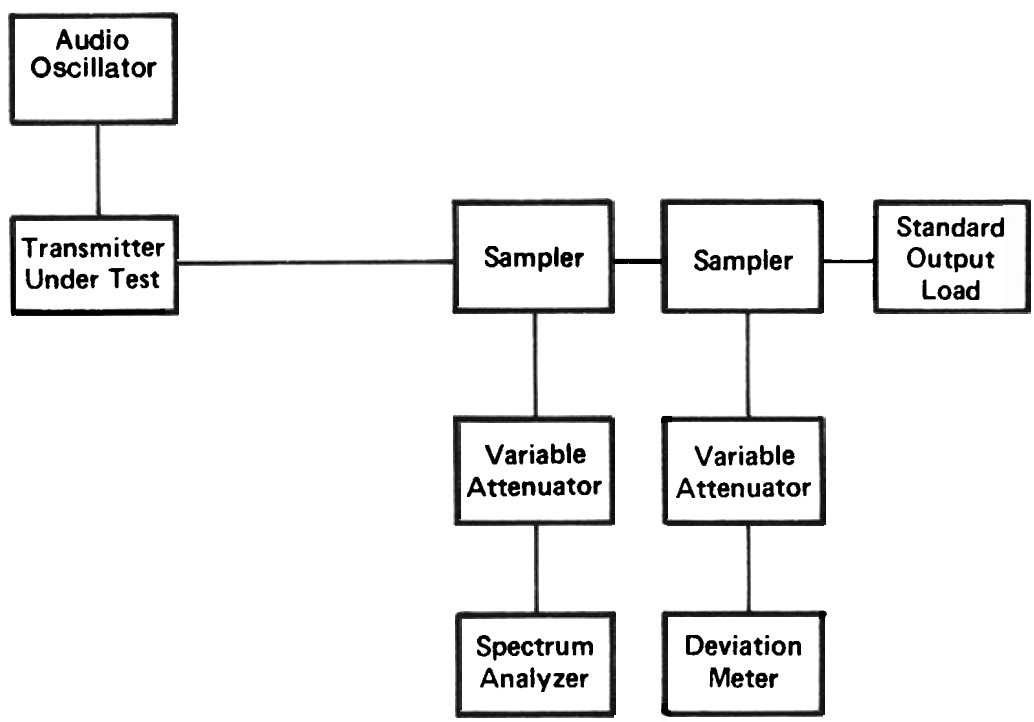

FIGURE 11. *Block diagram for sideband spectrum measurement.*

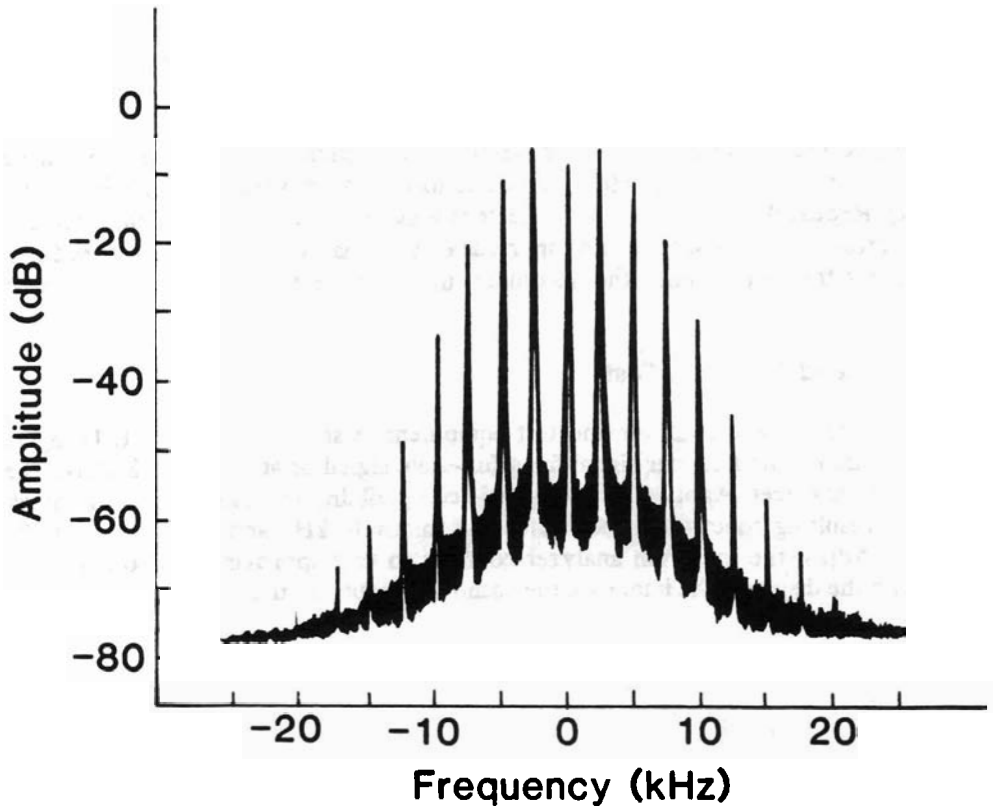

FIGURE 12. *Typical sideband spectrum of a transmitter using a 2.5 kHz tone 16 dB greater than that required to produce ±2.5 kHz deviation at 1 kHz.*

Record the sideband spectrum attenuations as the differences between the center frequency amplitude and the amplitudes of the sidebands located at ±10 kHz and ±20 kHz from the center frequency.

5.6 Battery Service Life Tests

Interconnect the transmitter/battery combination and the test equipment as shown in figure 13. Activate the transmitter and measure the time required for the nominal output power to decrease 3 dB. Repeat for each battery in the sample.

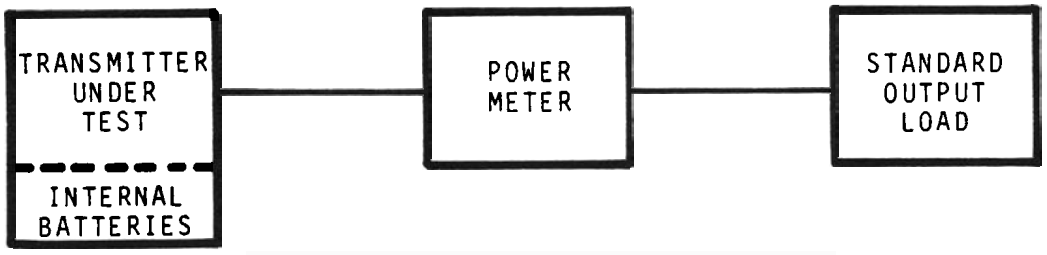

FIGURE 13. *Block diagram for battery service life measurement.*

APPENDIX A—REFERENCES

[1] Greene, F. M. Technical terms and definitions used with law enforcement communications equipment. LESP-RPT-0203.00. National Institute of Justice, U.S. Department of Justice, Washington, DC; 1973 July.

[2] Public safety radio services. Rules and regulations. Vol. 5, Part 89. Federal Communications Commission, 1919 M Street, NW., Washington, DC 20554.

APPENDIX B—BIBLIOGRAPHY

American national standard specification for dry cells and batteries. ANSI C 18.1-1969.

Batteries used with personal/portable FM transceivers. NILECJ-STD-0211.00. National Institute of Justice, U.S. Department of Justice, Washington, DC; 1975 June.

Battery Council International Newsletter. Number 8-72; 1972 March 17.

Gerber, E. A.; Sykes, R. A. Quartz frequency standards. Proceedings of the IEEE, Vol. 55, No. 6, 783–791; 1967 June.

IEEE standard dictionary of electrical and electronic terms. IEEE Standard 100-1972. IEEE Inc., New York.

Jarett, D.; Rudoff, A. A new technique for measuring mobile transmitter noise spectra. IEEE Trans. on Vehicular Communications, Vol. VC-15, No. 2, 48–55; 1966 October.

Jesch, R. L.; Berry, I. S. Batteries used with law enforcement communications equipment. Comparison and performance characteristics. LESP-RPT-0201.00. National Institute of Justice, U.S. Department of Justice, Washington, DC; 1972 May.

Larsen, N. T.; Clague, F. R. The NBS type II power measurements. ISA-70 Meeting. Paper 712–70. Philadelphia, PA; 1980 October.

Minimum standards for land mobile communication FM or PM transmitters, 25–470 MHz. EIA Standard 152-D. Electronic Industries Association, 2001 Eye St., NW., Washington DC 20006; 1989 April.

Minimum standards for portable/personal land mobile communication equipment, 25 to 1000 MHz. EIA Standard 316-B. Electronic Industries Association, 2001 Eye St., NW., Washington DC 20006; 1979 May.

Personal FM transceivers. NIJ Standard-0209.01. National Institute of Justice, U.S. Department of Justice, Washington, DC; 1985 September.

Rumfelt, A. Y.; Elwell, L. B. Radio frequency power measurements. Proceedings of the IEEE, Vol. 55, No. 6, 837–850; 1967 June.

Scott, Jr., W. W. Batteries used with law enforcement communications equipment. Chargers and charging techniques. LESP-RPT-0202.00. National Institute of Justice, U.S. Department of Justice, Washington, DC; 1972 June.

Shepard, N. H.; Smith, J. S. The Gaussian curve transmitter noise limits spectrum utilization. IRE Transactions on Vehicular Communications. PGUC-10, 27–32; 1958 April.

Tary, J. J.; Livingston, T. L. A peak FM deviation calibrator graph. ESSA Tech. Memorandum, ERLTM-ITS 229; 1970 April.

White, D. R. J. A handbook on electrical noise and electromagnetic interference specifications, Vol. 1. Don White Consultants, Gainesville, VA; 1971.