U.S. Department of Justice
Office of Justice Programs
National Institute of Justice

SEPTEMBER 2014

NATIONAL INSTITUTE OF JUSTICE

STANDARD RESTRAINTS

Criminal Justice Restraints NIJ Standard 1001.00

NIJ

U.S. Department of Justice
Office of Justice Programs

810 Seventh St. N.W.
Washington, DC 20531

Eric H. Holder, Jr.

Attorney General

Karol V. Mason

Assistant Attorney General

William J. Sabol, Ph.D.

Acting Director, National Institute of Justice

This and other publications and products of the National Institute of Justice can be found at:

National Institute of Justice

http://www.nij.gov

Office of Justice Programs

Innovation • Partnerships • Safer Neighborhoods

http://www.ojp.usdoj.gov

The findings and conclusions in this publication are those of the authors and do not necessarily reflect the official position or policies of the U.S. Department of Justice.

U.S. Department of Justice
Office of Justice Programs
National Institute of Justice

Criminal Justice Restraints Standard

NIJ Standard-1001.00

September 2014

NCJ 247988

NATIONAL INSTITUTE OF JUSTICE

William J. Sabol, Ph.D.
Acting Director

Chris Tillery
Office Director, Office of Science and Technology

William Ford
Division Director, Office of Science and Technology

Debra Stoe
Physical Scientist, Office of Science and Technology

Brian Montgomery
General Engineer, Office of Science and Technology

The National Institute of Justice is a component of the Office of Justice Programs, which also includes the Bureau of Justice Assistance; the Bureau of Justice Statistics; the Office for Victims of Crime; the Office of Juvenile Justice and Delinquency Prevention; and the Office of Sex Offender Sentencing, Monitoring, Apprehending, Registering, and Tracking.

Special Technical Committee

This standard was developed by a Special Technical Committee of practitioners, technical experts and others with experience in standards development and conformity assessment. Committee members, their organizations, and their professional affiliations or expertise are listed in Table 1 and Table 2 (with their respective organizations during the development of this document).

Table 1. Practitioners

Type	Name	Organization	Professional Affiliation
Local	Bryan Doswell	Prince George's County (Md.) Sheriff's Department	National Sheriffs' Association
Local	Ronald A. Pontecore, Jr.	Chicago (Ill.) Police Department	International Association of Chiefs of Police
Local	Daniel Sheffield	Prince George's County (Md.) Police Department	Fraternal Order of Police
Local	Kurt Weigel	Lenexa (Kan.) Police Department	National Tactical Officers Association
State	Jay DeBold, Lead	Ohio Department of Rehabilitation and Corrections	
State	Gerald Espinoza	Colorado Department of Corrections	
Federal	Jim Murtha	U.S. Department of Justice, Federal Bureau of Prisons	

Table 2. Subject Matter and Technical Experts

Type	Name	Organization	Expertise
Federal	Gordon Gillerman	U.S. Department of Commerce, National Institute of Standards and Technology	Standards, Conformity Assessment
Federal	Jeffrey Horlick (contractor)	U.S. Department of Commerce, National Institute of Standards and Technology	Standards, Conformity Assessment
Federal	Guillaume Messin	U.S. Department of Commerce, National Institute of Standards and Technology	Test Method Development
Federal	Casandra Robinson (contractor)	U.S. Department of Energy, Savannah River National Laboratory	Standards, Conformity Assessment
Private	Joel Albinowski	Dayton T. Brown, Inc.	Test Method Development
Private	Jason Allen	Intertek Testing Services	Test Method Development
Private	Steve Allison, Project Facilitator	Denver University, Weapons and Protective Systems Technology Center of Excellence	Law Enforcement and Project Support
Private	Jud Holl	Stork MMA Laboratories	Test Method Development
Private	Gene McCausey	Denver University, Weapons and Protective Systems Technology Center of Excellence	Law Enforcement and Project Support
Private	Alex Sundstrom	Lockheed Martin Corporation, National Law Enforcement and Corrections Technology Center-National	Compliance Testing

Advisory Working Group

The work of the Special Technical Committee was reviewed by an Advisory Working Group (AWG) made up of senior-level representatives from stakeholder organizations and individuals with experience in standards development and conformity assessment. Organizations represented on the AWG are listed in Table 3 below.

Table 3. AWG Members

Organization
American Correctional Association
U.S. Department of Commerce, National Institute of Standards and Technology, Law Enforcement Standards Office
U.S. Department of Homeland Security
Fraternal Order of Police
International Association of Chiefs of Police
National Sheriffs' Association
National Tactical Officers Association

Steering Committee

The Steering Committee generally directed the effort and helped to ensure coordination among relevant federal programs. The following were the members of the Steering Committee (shown in Table 4 with their respective organizations during the development of this document).

Table 4. Steering Committee Members

Member	Organization	Title
Gregory K. Ridgeway, Chair	U.S. Department of Justice, Office of Justice Programs, National Institute of Justice	Acting Director
Bert Coursey	U.S. Department of Homeland Security, Science and Technology Directorate, Office of Standards	Acting Director
Mark Stolorow	U.S. Department of Commerce, National Institute of Standards and Technology, Law Enforcement Standards Office	Director

FOREWORD

This document is a voluntary performance standard for restraints for use by the criminal justice community. It defines both performance requirements and the methods used to test performance. In order for a manufacturer, supplier or other entity to claim that a particular restraint model satisfies this National Institute of Justice (NIJ) standard, the model must be in compliance with this standard, as determined in accordance with this document and the associated document, *Criminal Justice Restraints Certification Program Requirements*, NIJ CR-1001.00. Both this standard and the associated certification program requirements document are produced as a part of the Standards and Testing Program of the U.S. Department of Justice, Office of Justice Programs, NIJ, as is a third associated document, the *Criminal Justice Restraints Selection and Application Guide*, NIJ Guide-1001.00.

All requirements stated in this standard, including those that explicitly employ mandatory language (e.g., “shall”), are those necessary to satisfy this standard. Nothing in this document is intended to require or imply that commercially available restraints must satisfy this standard.

This document is a performance and testing standard and, therefore, provides precise and detailed test methods.

This standard addresses only wrist to wrist and ankle to ankle restraints. This standard does not address any restraint constructed of natural/non-synthetic materials (e.g., leather, natural rubber, cotton).

Requirements for manufacturers, suppliers or other entities seeking to demonstrate conformity with this standard are provided in a separate document, *Criminal Justice Restraints Certification Program Requirements*, NIJ CR-1001.00. Those seeking guidance concerning selection and application of restraints should refer to the most recent version of the *Criminal Justice Restraints Selection and Application Guide*, NIJ Guide-1001.00, which explains the standard in nontechnical language and provides guidance into selecting, procuring, using and maintaining restraints.

Although agencies are advised always to require their procurements to meet or exceed the most recent and up-to-date version of this standard, this does not necessarily mean that agencies should remove restraints that they currently have in use from service, as restraints that do not meet current standards may well be better than no restraints at all.

NIJ standards are subject to continued research, development and testing, review and modification as appropriate on an ongoing basis. Users of this standard are advised to consult the NIJ Standards and Testing Program webpage, accessed from www.nij.gov/standards, on a regular basis to determine whether the documents have been revised or superseded.

Technical comments and recommended revisions are welcome. Please send all written comments and suggestions to Director, National Institute of Justice, Office of Justice Programs, U.S. Department of Justice, Washington, DC, 20531, ATTN: NIJ Standards and Testing Program.

Nothing in this document is intended to create any legal or procedural rights enforceable against the United States. Moreover, nothing in this document creates any obligation for manufacturers, suppliers, criminal justice agencies, or others to follow or adopt this voluntary standard.

CONTENTS

1. SCOPE, PURPOSE, AND APPLICATION 1
1.1 Scope 1
1.2 Purpose 2
1.3 Application 2
2. REFERENCES 4
2.1 Associated Publications 4
2.2 Referenced Publications 4
3. DEFINITIONS 6
3.1 General 6
3.2 Standard-Specific Definitions 6
4. FORM AND FIT REQUIREMENTS 10
4.1 Locking Mechanism Requirements for Restraint Models 10
4.2 Loop Requirements for Restraint Models 10
4.3 Standard Key Requirements 10
5. PERFORMANCE REQUIREMENTS 11
5.1 Acceptance Criteria for Restraint Models 11
5.2 Requirements for All Types of Restraint Models 11
5.3 Type 1 Restraint Model Requirements 11
5.4 Type 2 Restraint Model Requirements 12
5.5 Type 3 Restraint Model Requirements 13
5.6 Type 4 Restraint Model Requirements 14
6. TEST METHODS 17
6.1 General Test Requirements 17
6.2 Samples 17
6.3 Conditioning Procedures 19
6.4 Workmanship Inspection 20
6.5 Dynamic Load Test 20
6.6 Type 1 and Type 2 Restraints Static Load Tests 22
6.7 Type 1 and Type 2 Restraints Retention System Twist Test 23
6.8 Flame Exposure Resistance Test 23
6.9 Type 3 and Type 4 Restraints Static Load Test 24
6.10 Type 3 and Type 4 Restraints Twist Test 25

6.11 Type 3 and Type 4 Restraints Swivel Pry Resistance Test 25
6.12 Type 3 and Type 4 Restraints Operational Tests..... 26
6.13 Type 3 and Type 4 Restraints Cheek Plate Test 26
6.14 Type 3 and Type 4 Restraints Double-Lock Impact Test 27
6.15 Type 3 and Type 4 Restraints Compression Test 27
6.16 Standard Key Functionality Test 28
6.17 Nonstandard Key Functionality Test..... 28
7. LABELING AND INFORMATION.....30
7.1 General Product Label Requirements for Restraint Models..... 30
7.2 Compliance Statement for Each Certified Product of a Compliant Restraint Model 30
7.3 User Information to Be Provided by the Supplier of the Restraint 30
APPENDIX.....32
Figure 1. Examples of Type 1 Restraints..... 32
Figure 2. Examples of Type 2 Restraints..... 33
Figure 3. Example of Type 3 Restraints 34
Figure 4. Standard Key Dimensions 35
Figure 5. Individual Loop Dynamic Load Test Setup 36
Figure 6. Double Loop Dynamic Load Test Setup for Nonmetallic Restraints 37
Figure 7. Double Loop Dynamic Load Test Setup for Metallic Restraints..... 38
Figure 8. Individual Loop Static Load Test Setup..... 39
Figure 9. Double Loop Static Load Test Setup 40
Figure 10. Restraint Retention System Twist Test Setup..... 41
Figure 11. Static Load Test Setup 42
Figure 12. Static Load Test Setup for Individual Loops..... 43
Figure 13. Restraint Twist Test Setup 44
Figure 14. Swivel Pry Test Setup..... 45
Figure 15. Cheek Plate test Setup..... 46
Figure 16. Double Lock Impact Test Setup..... 47
Figure 17. Compression Test Setup..... 48

ACRONYMS, TECHNICAL SYMBOLS, AND ABBREVIATIONS

Acronyms

ASTM	ASTM International
IEC	International Electrotechnical Commission
ISO	International Organization for Standardization
MIL	Military
NIJ	National Institute of Justice
STD	Standard
UL	Underwriters Laboratories
U.S.	United States

Technical Symbols and Abbreviations

°C	degree Celsius
°F	degree Fahrenheit
ft·lbs	foot pounds
lb	Pound
lbf	pound force
lbf·in	pound force inch
lbs	Pounds
N	Newton
N·m	newton meter
oz	ounce
“	Inch
RH	relative humidity

1. SCOPE, PURPOSE AND APPLICATION

1.1 Scope

1.1.1 This document is a voluntary standard. All requirements stated in this standard, including those that explicitly employ mandatory language (e.g., “shall”), are those necessary to satisfy the standard. Nothing in this document is intended to require or imply that commercially available restraints must satisfy this standard. In order for a manufacturer or other entity to claim that a particular restraints model satisfies this NIJ standard, however, the model must be found to comply with this standard as determined in accordance with this document and the associated document, *Criminal Justice Restraints Certification Program Requirements*, NIJ CR-1001.00.

1.1.2 This standard specifies the minimum requirements for form and fit, performance, testing, documentation and labeling of restraints intended to be used by criminal justice personnel to restrain subjects.

1.1.3 This standard addresses only wrist to wrist and ankle to ankle restraints.

1.1.4 This standard does not specify requirements for aftermarket keys or any accessories. All testing required in this standard shall be performed with no accessories attached.

1.1.5 This standard does not address any restraint constructed of natural/nonsynthetic materials (e.g., leather, natural rubber, cotton).

1.1.6 This standard shall not be understood as addressing all of the safety concerns associated with the use of criminal justice restraints. Users of this standard should be aware of all safety and health issues associated with the use of restraints. User information related to these issues is provided in *Criminal Justice Restraints Selection and Application Guide*, NIJ Guide-1001.00.

1.1.7 This standard shall not be understood as addressing the safety concerns, if any, associated with the use of this standard by testing facilities.

1.1.8 No supplier or other entity shall claim compliance with only selected portions of this standard. The restraints model shall meet all applicable stated requirements.

1.1.9 Nothing herein shall be understood to restrict any supplier or other entity from exceeding the requirements of this standard.

1.1.10 As appropriate (e.g., for models that employ materials or forms of construction that were not anticipated when this standard was developed or are not addressed by this standard), NIJ may modify the test methods of the standard or establish new ones.

1.2 Purpose

1.2.1 The purpose of this NIJ voluntary standard is to specify minimum requirements for restraints used by criminal justice personnel conducting law enforcement and corrections duties, and methods for assessing that the performance requirements are met.

1.2.2 The purpose of the test methods in this standard is to assess performance of restraints and should not be understood to specify the appropriate type of restraint for operational situations.

1.3 Application

1.3.1 This standard categorizes restraints into four types based on the intended operational use.

1.3.1.1 Type 1 restraints are intended for temporary control when the subject is under direct observation, such as during a criminal justice correctional facility evacuation or mass arrest. Type 1 restraints are intended to be single use. Type 1 restraints consist primarily of (1) the band or strap and (2) the retention system or locking mechanism For an example, see Figure 1 in the Appendix.

1.3.1.2 Type 2 restraints are intended for temporary control when the subject is under direct observation, such as during a criminal justice correctional facility evacuation or mass arrest. Type 2 restraints are intended to be reusable for a limited number of uses and have a keyed locking mechanism operated by a standard key. Type 2 restraints typically offer minimal tamper resistance. Type 2 restraints consist primarily of (1) the band or strap and (2) the keyed retention system or keyed locking mechanism. For an example, see Figure 2 in the Appendix.

1.3.1.3 Type 3 restraints are intended for control when the subject is not under direct observation but is supervised continuously, such as during transport. Type 3 restraints are intended to be reusable for thousands of uses and have a keyed locking mechanism operated by a standard key. Type 3 restraints have a higher level of tamper resistance than Type 2. Type 3 restraints are typically metallic. Type 3 restraints typically consist of (1) the cheek plate assembly, (2) the ratchet arm, (3) the key hole, (4) the key post, (5) the locking mechanism, (6) the pawl and (7) the chain and swivel or the hinge For an example, see Figure 3 in the Appendix.

1.3.1.4 Type 4 restraints are intended for control when the subject is not under direct observation but is supervised continuously, such as during transport. Type 4 restraints are intended to be reusable for thousands of uses and have a keyed locking mechanism operated by a nonstandard key. Type 4 restraints have a higher level of tamper resistance than Type 3. Type 4 restraints are typically metallic. Type 4 restraints typically consist of (1) the cheek plate assembly, (2) the ratchet arm, (3) the key hole, (4) the locking mechanism, (5) the pawl, and (6) the chain and swivel or the hinge.

2. REFERENCES

2.1 Associated Publications

The following document is a companion publication to NIJ Standard-1001.00 and NIJ CR-1001.00.

NIJ Guide-1001.00, *Criminal Justice Restraints Selection and Application Guide*. Washington, DC: National Institute of Justice, U.S. Department of Justice.

2.2 Referenced Publications

The following references form a basis for and provide support for the requirements and procedures described in this standard. For dated references, only the edition cited applies. For undated references, the latest edition of the referenced publication applies, including any amendments.

2.2.1 ASTM International Publications

ASTM B117, 2007a, "Standard Practice for Operating Salt Spray (Fog) Apparatus," ASTM International, West Conshohocken, PA, 2007, DOI: 10.1520/B0117-07A, www.astm.org.

ASTM D968, 2005e1, "Standard Test Methods for Abrasion Resistance of Organic Coatings by Falling Abrasive," ASTM International, West Conshohocken, PA, 2005, DOI: 10.1520/D0968-05E01, www.astm.org.

ASTM E8/E8M, 2008, "Standard Test Methods for Tension Testing of Metallic Materials," ASTM International, West Conshohocken, PA, 2008, DOI: 10.1520/D0968-05E01, www.astm.org.

ASTM G154, 2006, "Standard Practice for Operating Fluorescent Light Apparatus for UV Exposure of Nonmetallic Materials," ASTM International, West Conshohocken, PA, 2006, DOI: 10.1520/G0154-06, www.astm.org.

2.2.2 ISO/IEC Publications

ISO/IEC Guide 65:1997. *General Requirements for Bodies Operating Product Certification Systems.*

2.2.3 U.S. Government Publications

Guideline for Disinfection and Sterilization in Healthcare Facilities. 2008. Atlanta, GA: Centers for Disease Control and Prevention, U.S. Department of Health and Human Services. Retrieved May 24, 2011, from www.cdc.gov/hicpac/disinfection_sterilization/6_0disinfection.html.

MIL–STD–810G, *Test Method Standard for Environmental Engineering Considerations and Laboratory Tests.* 2008. Washington, DC: U.S. Department of Defense.

NIJ CR-1001.00, *Criminal Justice Restraints Certification Program Requirements.* 2013. Washington, DC: National Institute of Justice, U.S. Department of Justice.

2.2.4 Underwriters Laboratories (UL) Publications

UL 94: *Test for Flammability of Plastic Materials for Parts in Devices and Appliances.* 1996. Northbrook, IL: Underwriters Laboratories Inc.

3. DEFINITIONS

3.1 General

The definitions contained in this chapter shall apply to these terms as used in this standard. Where terms are not defined in this chapter or within another chapter, they shall be defined using their ordinarily accepted meanings, unless the context unmistakably indicates otherwise.

3.2 Standard-Specific Definitions

3.2.1 **Accessories:** Any supplier-recommended or aftermarket items that can be attached to the restraint but that are not necessary for meeting the requirements of this standard.

3.2.2 **Ankle restraint:** A type of restraint used to restrict the mobility of the subject's legs by encircling the ankles.

3.2.3 **Care:** Cleaning, decontamination and storage of a product.

3.2.4 **Certified product**: Any unit of a compliant model.

3.2.5 **Chain:** A series of interconnected rings or links enabling a flexible connection between restraint loops (see Figure 3).

3.2.6 **Cheek plate assembly:** The component of a restraint that houses the locking mechanism, includes the double strand, and secures the pivot or hinge (see Figure 3.)

3.2.7 **Compliant:** The condition of a restraint model meeting or exceeding all applicable requirements of this standard as determined pursuant and subject to NIJ CR-1001.00.

3.2.8 **Component:** Any material, part or subassembly used in construction of a restraint.

3.2.9 **Crazing:** Small, visually apparent cracks in a surface finish.

3.2.10 **Decontamination:** The procedure or practice of applying chemical treatment, heat treatment or other means to cleanse restraints of pathogens or contagious material.

3.2.11 **Double-locking mechanism:** A component of the restraint that, once engaged, prevents any further closure or release until disengaged.

3.2.12 **Double loop restraint:** A type of restraint in which each wrist or ankle is individually held.

3.2.13 **Hinge:** The attachment point where one loop of a restraint is connected to the other loop and which limits a twisting motion by a subject while the restraint is applied.

3.2.14 **Key:** Instrument designed specifically to open, unclasp, lock, unlock, loosen or allow restraints to be removed or adjusted to fit. (See 3.2.37, Standard key and 3.2.24, Nonstandard key.)

3.2.15 **Keyhole:** An entry port in a restraint that accepts a key for access to the locking mechanism(s). (See Figure 3 in the Appendix.)

3.2.16 **Key post:** A cylinder in the center of the keyhole that helps prevent insertion of foreign objects into the keyhole and assists with key alignment (See Figure 3.)

3.2.17 **Locking mechanism:** The component of a restraint that controls its closure and release.

3.2.18 **Loop:** The component(s) of a restraint that encircles the wrist(s) or ankle(s) of a subject. (See 3.2.12, Double loop restraint, and 3.2.35, Single loop restraint.)

3.2.19 **Maintenance:** Inspection, repair and retirement of a product.

3.2.20 **Manufacturer:** A commercial enterprise engaged in fabricating a product.

3.2.21 **Metallic restraint:** A restraint in which the primary material of construction is metal (including alloys).

3.2.22 **Model:** The manufacturer's design, with unique specifications and characteristics, of a particular item.

3.2.23 **Nonmetallic restraint:** A restraint in which any material of construction is not metal (including alloys). Note: A nonmetallic coating alone shall not qualify a restraint as a nonmetallic restraint.

3.2.24 **Nonstandard key:** A key that provides a high level of tamper resistance or is unique to a specific set of restraints; synonymous with high-security key.

3.2.25 **Pawl:** A spring-loaded pivoted bar that engages the teeth of a ratchet arm, permitting it to advance in the closing direction and preventing reverse direction. (See Figure 3.)

3.2.26 **Pin**: The portion of a standard key that may be used to engage or disengage the double-locking mechanism. (See Figure 4.)

3.2.27 **Pivot:** The connecting point between the ratchet arm and the cheek plate. (See Figure 3 in the Appendix.)

3.2.28 **Product:** One unit of a particular model.

3.2.29 **Ratchet arm:** A bar with inclined teeth designed to engage with a pawl. (See Figure 3 in the Appendix.)

3.2.30 **Restraint:** A device designed for and used to restrict a subject's mobility or limit movement of a subject's wrists or ankles. (See 3.2.2, Ankle restraint and 3.2.43, Wrist restraint.)

3.2.31 **Rigid construction:** A fixed and nonflexible construction, such as a solid bar connecting the loops, that does not allow the restraint to fold or rotate in any manner when in use.

3.2.32 **Sample:** A restraint or component that is to be subjected to conditioning procedures as specified in this standard in preparation for subsequent testing. A sample is to be representative of a model (or a model component, as applicable).

3.2.33 **Shall:** Indicates a mandatory requirement for the purpose of this voluntary standard.

3.2.34 **Should:** Indicates a recommendation that is advised but not required for the purposes of this voluntary standard.

3.2.35 **Single loop restraint:** A type of restraint in which both wrists or both ankles are held together.

3.2.36 **Single use:** Used only once and then disposed of.

3.2.37 **Standard key:** A key that shares common use across a number of restraints and meets dimensional requirements for key shaft outer diameter, key shaft inner diameter, key shaft wall thickness, flag thickness, flag length, and double-lock post outer diameter. (See Figure 4 for a diagram of a standard key.)

3.2.38 **Subject:** An individual being restrained.

3.2.39 **Supplier:** The party that is responsible for ensuring that products meet and, if applicable, continue to meet, the requirements on which the certification is based (ISO/IEC Guide 65, 3.1).

3.2.40 **Swivel:** A component of a restraint that creates an interface or serves as the attachment point wherein one loop of a restraint is connected to another by means of a flexible device such as a chain. It is often placed between the loops that encircle an individual's wrists or ankles. The swivel allows for rotation and movement of the restraint during storage and while applied.

3.2.41 **Types:** NIJ classification of restraints based on operational requirements, level of security, and reusability. There are four types of restraints: Type 1, Type 2, Type 3 and Type 4. (See Section 1.3.1.)

3.2.42 **Unintentional release of restraint**: Partial or full opening of the restraint or disengaging of the double-locking mechanism (if applicable) by any means other than that specified by the supplier in the user information.

3.2.43 **Wrist restraint:** A type of restraint used to restrict the mobility of the subject's arms by encircling the wrists.

4. FORM AND FIT REQUIREMENTS

To be tested under the performance requirements of this standard, restraint models shall satisfy the requirements of this chapter.

4.1 Locking Mechanism Requirements for Restraint Models

4.1.1 Type 1 restraints shall incorporate a locking mechanism that is intended for single use.

4.1.2 Type 2 restraints shall incorporate a locking mechanism that is actuated according to supplier instructions and released with a standard key.

4.1.3 Type 3 restraints shall incorporate a double-locking mechanism that is actuated according to supplier instructions and released with a standard key.

4.1.4 Type 4 restraints shall incorporate a double-locking mechanism that is actuated according to supplier instructions and released with a nonstandard key.

4.2 Loop Requirements for Restraint Models

4.2.1 Type 1 and Type 2 restraints may be single loop or double loop.

4.2.2 Type 3 and Type 4 restraints shall be double loop.

4.3 Standard Key Requirements

4.3.1 All standard keys provided with Type 2 and Type 3 restraints shall meet the dimensional specifications shown in Figure 4. (See the Appendix.)

5. PERFORMANCE REQUIREMENTS

5.1 Acceptance Criteria for Restraint Models

5.1.1 All applicable tests specified for each type of restraint and key shall be successfully completed, and every sample shall meet or exceed the performance requirements of Chapter 5, *Performance Requirements,* for that type of restraint.

5.2 Requirements for All Types of Restraint Models

5.2.1 Workmanship Inspection

5.2.1.1 Each and every sample, regardless of type, shall be evaluated as specified in Section 6.4, *Workmanship Inspection*, and shall demonstrate the following:

- No foreign matter shall be embedded.
- No flaking, powdering, peeling, blistering, cracking or crazing shall be observed.
- No missing, broken, malformed, misaligned or loose parts shall be observed.
- All required markings shall be present, legible, correct, and imprinted by etching, engraving or other permanent means.

5.2.2 No sample, regardless of type, shall demonstrate unintentional release of restraint during any test procedure.

5.2.3 All tests referenced in the following sections shall begin with the guidelines specified in sections 6.1 and 6.2.

5.3 Type 1 Restraint Model Requirements

5.3.1 Five untested samples shall be subjected to Section 6.5, *Dynamic Load Test*, and no sample shall demonstrate any unintentional release of restraint. If the samples contain nonmetallic materials, the samples shall be subjected to *Temperature Exposure Conditioning* as specified in Section 6.3.2 prior to testing.

5.3.2 Five untested samples shall be subjected to Section 6.6, *Type 1 and Type 2 Restraints Static Load Tests*, and no sample shall demonstrate any unintentional release of restraint. If the samples contain nonmetallic materials, the samples shall be subjected to *Temperature Exposure Conditioning* as specified in Section 6.3.2 prior to testing.

5.3.3 If the restraint is double loop, five untested samples shall be subjected to Section 6.7, *Type 1 and Type 2 Restraints Retention System Twist Test*, and no sample shall

demonstrate any unintentional release of restraint. If the samples contain nonmetallic materials, the samples shall be subjected to *Temperature Exposure Conditioning* as specified in Section 6.3.2 prior to testing.

5.3.4 If the restraint's loops contain nonmetallic materials, five untested samples shall be subjected to Section 6.8, *Flame Exposure Resistance Test*. Each sample shall be self-extinguishing.

5.4 Type 2 Restraint Model Requirements

5.4.1 Each and every sample shall initially be subjected to Section 6.16, *Standard Key Functionality Test*. The standard key(s) supplied with each sample shall successfully release the lock/double lock with every attempt. If a sample has only undergone this initial test, it shall be considered to be "untested" for the remaining subsections of Section 5.4.

5.4.2 If the restraints contain only metallic materials, perform the following procedures:

5.4.2.1 Five untested samples shall be subjected to Section 6.6, *Type 1 and Type 2 Restraints Static Load Tests*. No sample shall demonstrate any unintentional release of restraint.

5.4.2.2 Five untested samples shall be subjected to Section 6.5, *Dynamic Load Test*, and no sample shall demonstrate any unintentional release of restraint.

5.4.2.3 Five untested samples of each double loop restraint shall be subjected to Section 6.7, *Type 1 and Type 2 Restraints Retention System Twist Test*, and no sample shall demonstrate any unintentional release of restraint.

5.4.3 If the restraints contain any nonmetallic materials, 15 untested samples shall be subjected to *Temperature Exposure Conditioning* as specified in Section 6.3.2, followed by the series of tests below, and the samples shall meet the specified requirements.

5.4.3.1 Prior to any testing, all samples shall be subjected to Section 6.16, *Standard Key Functionality Test*. The standard key(s) supplied with each sample shall successfully release the lock/double lock with every attempt.

5.4.3.2 Five of the 15 samples shall be subjected to Section 6.6, *Type 1 and Type 2 Restraints Static Load Tests*. No sample shall demonstrate any unintentional release of restraint.

5.4.3.3 Five more of the 15 samples shall be subjected to Section 6.5, *Dynamic Load Test*, and no sample shall demonstrate any unintentional release of restraint.

5.4.3.4 If the restraints are double loop, the remaining 5 of the 15 samples shall be subjected to Section 6.7, *Type 1 and Type 2 Restraints Retention System Twist Test*, and no sample shall demonstrate any unintentional release of restraint.

5.4.4 If any external portion of the restraint contains nonmetallic materials, five untested samples shall be subjected to Section 6.3.3, *Solar Radiation Exposure Conditioning*, followed by the series of tests (in the order listed) below. Each sample shall meet the specified requirements.

5.4.4.1 Section 6.16, *Standard Key Functionality Test*. The standard key(s) supplied with each sample shall successfully release the lock/double lock with every attempt.

5.4.4.2 Section 6.6, *Type 1 and Type 2 Restraints Static Load Tests.* No sample shall demonstrate any unintentional release of restraint.

5.4.5 If the restraint's loops contain nonmetallic materials, five untested samples shall be subjected to Section 6.8, *Flame Exposure Resistance Test*. Each sample shall be self-extinguishing.

5.5 Type 3 Restraint Model Requirements

5.5.1 Each and every sample shall initially be subjected to Section 6.16, *Standard Key Functionality Test*. The standard key(s) supplied with each sample shall successfully release the lock/double lock with every attempt. If a sample has only undergone this initial test, it shall be considered to be "untested" for the remaining subsections of Section 5.5.

5.5.2 Five untested samples shall be subjected to the following series of tests and conditioning procedures (in the order listed), and each sample shall meet the specified requirements:

5.5.2.1 Section 6.12, *Type 3 and Type 4 Restraint Operational Tests.* Each sample shall function as stated in the user information provided by the supplier.

5.5.2.2 Section 6.3.5, *Decontamination Solution Exposure Conditioning,* and Section 6.12, *Type 3 and Type 4 Restraints Operational Tests.* If the restraints contain any metallic materials, then, per Section 6.3.4, *Salt Spray Exposure Conditioning* shall be performed after *Decontamination Solution Exposure Conditioning*. Each sample shall function as stated in the user information provided by the supplier.

5.5.2.3 Section 6.16, *Standard Key Functionality Test*. The standard key(s) supplied with each sample shall successfully release the lock/double lock with every attempt.

5.5.3 Five untested samples shall be subjected to section 6.9, *Type 3 and Type 4 Restraints Static Load Test.* If the restraints contain any nonmetallic materials, the samples shall be subjected to the *Temperature Exposure Conditioning* as specified in Section 6.3.2 prior to testing. Each sample shall remain functional and demonstrate no unintentional release of restraint.

5.5.4 Five untested samples shall be subjected to Section 6.5, *Dynamic Load Test*, and each sample shall remain functional and demonstrate no unintentional release of restraint.

5.5.5 Five untested samples shall be subjected to Section 6.13, *Type 3 and Type 4 Restraints Cheek Plate Test*. No sample shall demonstrate any unintentional release of restraint.

5.5.6 If the restraint is double locking, five untested samples shall be subjected to Section 6.14, *Type 3 and Type 4 Restraints Double-Lock Impact Test*. Each sample shall remain functional and demonstrate no unintentional release of restraint.

5.5.7 Five untested samples shall be subjected to Section 6.15, *Type 3 and Type 4 Restraints Compression Test*. No sample shall demonstrate any deformation or unintentional release of restraint. A sample shall be considered to have failed if (1) the ratchet arm advances to the next position before the 50-lb load is achieved, (2) the double lock cannot be released or does not operate properly, or (3) the ratchet arm or locking devices do not function as stated in the user information provided by the supplier.

5.5.8 If the restraints have hinged, rigid or similar construction connecting the loops, five untested samples shall be subjected to Section 6.10, *Type 3 and Type 4 Restraints Twist Test*, followed by Section 6.12, *Type 3 and Type 4 Restraints Operational Tests.* Each sample shall function as stated in the user information provided by the supplier and shall demonstrate no unintentional release of restraint, separation of components, cracking or disengaging.

5.5.9 If the restraints have chain and swivel or similar construction connecting the loops, five untested samples shall be subjected to Section 6.11, *Type 3 and Type 4 Restraints Swivel Pry Resistance Test*. Each sample shall function as stated in the user information provided by the supplier and shall demonstrate no unintentional release of restraint, separation of components, cracking or disengaging.

5.5.10 If the restraint loop contains any nonmetallic materials, five untested samples shall be subjected to Section 6.8, *Flame Exposure Resistance Test.* Each sample shall be self-extinguishing.

5.6 Type 4 Restraint Model Requirements

5.6.1 Each and every sample shall initially be subjected to Section 6.17, *Nonstandard Key Functionality Test*. The nonstandard key(s) supplied with each sample shall successfully release the lock/double lock with every attempt. Standard keys shall not successfully release the lock/double lock for any attempt. If a sample has only undergone this initial test, it shall be considered to be "untested" for the remaining subsections of Section 5.6.

5.6.2 Five untested samples shall be subjected to the following series of tests and conditioning procedures (in the order listed), and each sample shall meet the specified requirements:

5.6.2.1 Section 6.12, *Type 3 and Type 4 Restraints Operational Tests*. Each sample shall function as stated in the user information provided by the supplier.

5.6.2.2 Section 6.3.5, *Decontamination Solution Exposure Conditioning,* and Section 6.12, *Type 3 and Type 4 Restraints Operational Tests.* If the restraints contain any metallic materials, then, per Section 6.3.4, *Salt Spray Exposure Conditioning* shall be performed after *Decontamination Solution Exposure Conditioning* and before *Type 3 and Type 4 Restraints Operational Tests*. Each sample shall function as stated in the user information provided by the supplier.

5.6.2.3 Section 6.17, *NonStandard Key Functionality Test*. The nonstandard key(s) supplied with each sample shall successfully release the lock/double lock with every attempt. Standard keys shall not successfully release the lock/double lock for any attempt.

5.6.3 Five untested samples shall be subjected to Section 6.9, *Type 3 and Type 4 Restraints Static Load Test*. If the restraints contain any nonmetallic materials, the samples shall be subjected to the *Temperature Exposure Conditioning* as specified in Section 6.3.2 prior to testing. Each sample shall remain functional and demonstrate no unintentional release of restraint.

5.6.4 Five untested samples shall be subjected to Section 6.5, *Dynamic Load Test,* and each sample shall remain functional and demonstrate no unintentional release of restraint.

5.6.5 Five untested samples shall be subjected to Section 6.13, *Type 3 and Type 4 Restraints Cheek Plate Test*. No sample shall demonstrate any unintentional release of restraint.

5.6.6 If the restraint is double locking, five untested samples shall be subjected to Section 6.14, *Type 3 and Type 4 Restraints Double-Lock Impact Test*. No sample shall demonstrate any unintentional release of restraint.

5.6.7 Five untested samples shall be subjected to Section 6.15, *Type 3 and Type 4 Restraints Compression Test*. No sample shall demonstrate any deformation or unintentional release of restraint. A sample shall be considered to have failed if (1) the ratchet arm advances to the next position before the 50-lb load is achieved, (2) the double lock cannot be released or does not operate properly, or (3) the ratchet arm or locking devices do not function as stated in the user information provided by the supplier.

5.6.8 If the restraints have hinged, rigid or similar construction connecting the loops, five untested samples shall be subjected to Section 6.10, *Type 3 and Type 4 Restraints Twist Test*, followed by Section 6.12, *Type 3 and Type 4 Restraints Operational Tests*. Each sample shall function as stated in the user information provided by the supplier and demonstrate no unintentional release of restraint, separation of components, cracking or disengaging.

5.6.9 If the restraints have chain and swivel or similar construction connecting the loops, five untested samples shall be subjected to Section 6.11, *Type 3 and Type 4 Restraints Swivel Pry Resistance Test*. Each sample shall function as stated in the user information provided by the supplier and demonstrate no unintentional release of restraint, separation of components, cracking or disengaging.

5.6.10 If the restraint's loops contain any nonmetallic materials, five untested samples shall be subjected to Section 6.8, *Flame Exposure Resistance Test.* Each sample shall be self-extinguishing.

6. TEST METHODS

6.1 General Test Requirements

6.1.1 Acceptance criteria shall be as stated in Chapter 5, *Performance Requirements*.

6.1.2 All testing required in this standard shall be performed with no accessories attached.

6.1.3 Unless the context unmistakably indicates otherwise, the duration specified in this chapter for any procedure (e.g., “500 hours”) shall be understood to run consecutively (e.g., “500 consecutive hours”).

6.1.4 Unless the context unmistakably indicates otherwise, an indication that an action is to “follow” something else or is to occur after something else should be understood to mean that the subsequent action should occur immediately after the preceding event.

6.1.5 All test results and observations shall be recorded and reported.

6.1.6 Unless otherwise specified, all tolerances shall be ± 0.15 inches.

6.2 Samples

6.2.1 General

6.2.1.1 A test sample may be a complete restraint or a portion taken from a complete restraint.

6.2.1.2 All samples for testing shall be provided by the supplier.

6.2.2 Type 1 Restraints

6.2.2.1 A minimum of 10 samples are required regardless of material composition.

6.2.2.2 If the restraint is double loop, an additional five samples are required.

6.2.2.3 If the restraint loop is the portion containing any nonmetallic materials, an additional five samples are required.

6.2.2.4 Type 1 restraints may be single loop or double loop and shall be tested according to the test methods specified for each. If a restraint is intended to be configured by

connecting two single loops to form a double loop, the restraint shall be tested in that configuration as a double loop.

6.2.3 Type 2 Restraints

6.2.3.1 A minimum of 15 samples are required regardless of material composition.

6.2.3.2 If any external portion of the restraint contains any nonmetallic materials, an additional five samples are required.

6.2.3.3 In addition to the requirement of Section 6.2.3.2, if the restraint loop is the portion containing any nonmetallic materials, an additional five samples are required.

6.2.3.4 Type 2 restraints may be single loop or double loop and shall be tested according to the test methods specified for each. If a restraint is intended to be configured by connecting two single loops to form a double loop, the restraint shall be tested in that configuration as a double loop.

6.2.4 Type 3 Restraints

6.2.4.1 A minimum of 30 samples are required regardless of material composition.

6.2.4.2 If the restraints have hinged, rigid or similar construction connecting the loops, an additional five samples are required.

6.2.4.3 If the restraints have chain and swivel or similar construction connecting the loops, an additional five samples are required.

6.2.4.4 If the restraint loop contains any nonmetallic materials, an additional five samples are required.

6.2.5 Type 4 Restraints

6.2.5.1 A minimum of 30 samples are required regardless of material composition.

6.2.5.2 If the restraints have hinged, rigid or similar construction connecting the loops, an additional five samples are required.

6.2.5.3 If the restraints have chain and swivel or similar construction connecting the loops, an additional five samples are required.

6.2.5.4 If the restraint loop contains any nonmetallic materials, an additional five samples are required.

6.3 Conditioning Procedures

6.3.1 Pertinent observations related to conditioning shall be recorded.

6.3.2 Temperature Exposure Conditioning

6.3.2.1 As stated in Section 5.4.3, temperature exposure conditioning applies to restraints containing nonmetallic materials.

6.3.2.2 The sample shall be subjected to a temperature cycling condition of -34°C to 44 °C ± 1°C (-29°F to 111°F ± 2°F) for 24 hours ± 15 minutes. The temperature cycle consists of -34°C (-29°F) for 12 hours after temperature stabilization and 44 °C (111°F) for 12 hours after temperature stabilization, with temperature transitions not to exceed 5°C (9°F) per minute. The sample shall be returned to 21 ± 3˚C (70 ± 5˚F) prior to subsequent testing.

6.3.3 Solar Radiation Exposure Conditioning

6.3.3.1 Solar radiation exposure conditioning applies to restraints containing nonmetallic materials.

6.3.3.2 The sample shall be subjected to solar radiation for 96 hours ± 15 minutes in accordance with Cycle 1 of Table X2.1 of ASTM G154.

6.3.4 Salt Spray Exposure Conditioning

6.3.4.1 Salt spray exposure conditioning applies to metallic restraints only.

6.3.4.2 The sample shall be subjected to salt spray in accordance with ASTM B117 and as specified herein. A 5 percent neutral salt solution, a chamber temperature of 35°C ± 2°C (95°F ± 4°F), and an exposure time of 12 hours shall be used. Each sample shall be suspended so as not to touch any other sample or the walls or floor of the chamber. At the completion of salt spray exposure, the sample shall be removed from the chamber and air-dried for 24 hours at a temperature of 21 ± 3˚C (70 ± 5˚F) and relative humidity of 50 percent ± 10 percent. After the test, the sample shall be inspected for evidence of substantial corrosion. The sample shall not be cleaned following exposure.

6.3.5 Decontamination Solution Exposure Conditioning

6.3.5.1 Decontamination solution exposure conditioning applies to Type 3 and Type 4 restraints.

6.3.5.2 The sample and its key shall be exposed to a 10-to-1 water and household bleach solution[1] (i.e., 10 parts water to 1 part bleach) for 5 cycles. Cycles shall consist of a 30-minute submersed, nonagitated exposure followed by removal and drying by hanging for a period of 30 minutes.

6.4 Workmanship Inspection

6.4.1 The sample shall be inspected for the defects indicated below by an individual having 20/20 vision (either unaided or corrected):

- Material damaged or showing excessive marring.
- Foreign matter embedded in material.
- Any flaking, powdering, peeling, blistering, cracking or crazing of the surface material.
- Any part missing, broken, malformed, loose or not in proper alignment.
- Missing, illegible, incorrect or nonpermanent markings.

6.4.2 Visual inspection results and observations shall be recorded and reported.

6.5 Dynamic Load Test

6.5.1 Test Fixture and Setup

6.5.1.1 A single test fixture is required for all dynamic load testing. This fixture is shown in Figure 5, Figure 6 and Figure 7 along with test setups for different restraint types.

6.5.1.2 The square tubing of the test fixture shall be attached to a rigid platform to maintain vertical position and stability of the fixture during testing.

6.5.1.3 The weight shown in the figures shall be 10 lb ± 1 oz and shall be dropped a distance of 13 ½ ± 1/8 inches from the bottom of the weight to the strike face of the metal disk to achieve the desired loading.

[1] For details on household bleach, its concentration, and composition, refer to http://www.cdc.gov/hicpac/disinfection_sterilization/6_0disinfection.html.

6.5.2 Type 1 and Type 2 Restraints

6.5.2.1 Restraints that are single loop shall be subjected to Section 6.5.4, *Individual Loop Dynamic Load Test*.

6.5.2.2 Restraints that are double loop shall be subjected to Section 6.5.4, *Individual Loop Dynamic Load Test*, and Section 6.5.5, *Double Loop Dynamic Load Test*.

6.5.3 Type 3 and Type 4 Restraints

6.5.3.1 The restraints shall be subjected to Section 6.5.5, *Double Loop Dynamic Load Test*.

6.5.4 Individual Loop Dynamic Load Test

6.5.4.1 The dimensions and configuration of the test setup shall be as shown in Figure 5. The loop shall be secured around a pair of drums with spacing as indicated between the drums and with the locking mechanism of the restraint positioned midway between the drums. Prior to the weight being dropped, the fixture and plate should be eased into a steady state position such that the only movement once the test begins will be due to the dropping of the weight. The weight shall be positioned relative to the lower drum assembly of the test fixture and allowed to drop uninhibited the specified distance and strike the metal disk. Results and observations shall be recorded.

6.5.4.2 If the sample is double loop, repeat the above step for the second loop.

6.5.5 Double Loop Dynamic Load Test

6.5.5.1 Nonmetallic Restraints: The sample shall be subjected to a dynamic load test. The dimensions and configuration of the test setup for nonmetallic restraints shall be as shown in Figure 6. Each loop of the sample shall be secured around one of a pair of drums with spacing of 0.5 ± 0.1 inches between the loop and the drum. The locking mechanism shall be positioned midway between the drums. Prior to the weight being dropped, the fixture and plate should be eased into a steady state position such that the only movement once the test begins will be due to the dropping of the weight. The weight shall be positioned relative to the lower drum assembly of the test fixture and allowed to drop uninhibited the specified distance and strike the metal disk. Results and observations shall be recorded.

6.5.5.2 Metallic Restraints: The dimensions and configuration of the test setup for metallic restraints shall be as shown in Figure 7. Each loop of the sample shall be secured around one of a pair of drums with spacing of 0.5 ± 0.1 inches between the loop and the drum. The locking mechanism shall be positioned midway between the drums. Prior to the weight being dropped, the fixture and plate should be eased into a steady

state position such that the only movement once the test begins will be due to the dropping of the weight. The weight shall be positioned relative to the lower drum assembly of the test fixture and allowed to drop uninhibited the specified distance and strike the metal disk. Results and observations shall be recorded.

6.6 Type 1 and Type 2 Restraints Static Load Tests

6.6.1 Test Equipment and Setup

6.6.1.1 A commercially engineered tensile test device[2] with data recording capabilities shall be used for all tests within this section.

6.6.1.2 A single test holder apparatus and drums shall be used for all tests within this section. Drum details, spacing and alignment during testing are specified in Figure 8 and Figure 9. Additionally, an example of a test holder apparatus is provided in the figures.

6.6.2 Application of Tests

6.6.2.1 Restraints that are single loop shall be subjected to Section 6.6.3, *Individual Loop Static Load Test*.

6.6.2.2 Restraints that are double loop shall be subjected to Section 6.6.3, *Individual Loop Static Load Test*, and Section 6.6.3, *Double Loop Static Load Test*.

6.6.3 Individual Loop Static Load Test

6.6.3.1 The sample shall be subjected to a static load test. The dimensions and configuration of the test setup for nonmetallic restraints shall be as shown in Figure 8. The test holder apparatus shall be attached to the tensile test device, and the sample loop shall be secured around a pair of drums with spacing as indicated between the drums and with the locking mechanism of the restraint positioned midway between the drums. The cross head speed shall be 1.0 ± 0.2 inches/minute. If the sample is unconditioned, the sample shall be loaded at the prescribed rate until 1668 N ± 9N (375 ± 2 lbf) or destruction has been achieved, whichever occurs first, and the load shall be removed. Observations and the tensile profile shall be recorded. If the sample breaks during the test, the ultimate tensile strength shall be indicated on the profile.

6.6.3.2 If the sample is double loop, repeat the above step for the second loop.

[2] Such devices specified in this standard shall comply with ASTM E8/E8M.

6.6.4 Double Loop Static Load Test

6.6.4.1 The sample shall be subjected to a static load test. The dimensions and configuration of the test setup for nonmetallic restraints shall be as specified in Figure 9. The test holder apparatus shall be attached to the tensile test device, and each loop of the sample shall be secured around one of a pair of drums with spacing as indicated between the loop and the drum. The locking mechanism shall be positioned midway between the drums. The cross head speed shall be 1.0 ± 0.2 inches/minute. The sample shall be loaded at the prescribed rate until 1668 N ± 9N (375 ± 2 lbf) or destruction has been achieved, whichever occurs first, and the load shall be removed Observations and the tensile profile shall be recorded. If the sample breaks during the test, the ultimate tensile strength shall be indicated on the profile.

6.7 Type 1 and Type 2 Restraints Retention System Twist Test

6.7.1 Test Equipment

6.7.1.1 A single test fixture is required for all twist tests. This fixture is shown in Figure 10 and Figure 13 along with test setups for different restraint types.

6.7.2 Application of Test

6.7.2.1 This test applies to double loop restraints only.

6.7.3 Procedure

6.7.3.1 The dimensions and configuration of the test setup shall be as specified in Figure 10. Each loop of the sample shall be secured around one of a pair of drums with spacing as indicated between the drums and with the locking mechanism of the restraint positioned midway between the drums to allow for flexing. One loop (around the drum) shall be inserted into the hub box and secured as shown. The other loop and drum shall be attached and secured to the rotating end of the test fixture so that flexing can occur from 0 degrees to ± 90 degrees for 25 cycles or 50 movements, not to exceed one cycle per second. Observations and results shall be recorded.

6.8 Flame Exposure Resistance Test

6.8.1 This test applies only to restraints having loops containing any nonmetallic materials. If the restraint loop contains multiple nonmetallic materials, each nonmetallic material shall be subjected to this flame exposure resistance test.

6.8.2 The sample shall be subjected to a flame test in accordance with UL 94, Procedure 7.5, modified as follows:

6.8.2.1 Five untested samples shall be used.

6.8.2.2 Use a 10-second flame.

6.8.2.3 The sample width shall be as received. The sample shall be taken from the thickest location in the loop.

6.8.2.4 The result shall be considered a pass if the sample is self-extinguishing. The burn rate shall not be calculated. Observations and results shall be recorded.

6.9 Type 3 and Type 4 Restraints Static Load Test

6.9.1 Test Equipment and Setup

6.9.1.1 A commercially engineered tensile test device with data recording capabilities shall be used for all tests within this section.

6.9.1.2 A single test holder apparatus and drums shall be used for all tests within this section. Drum details, spacing and alignment during testing are specified in Figure 11 and Figure 12.

6.9.2 Procedure

6.9.2.1 The test holder apparatus shall be attached to the tensile test device. Each loop of the sample shall be installed on the restraint bearing as shown in Figure 11 and shall be double locked with the ratchet arm engaged at the first notch entering the locking mechanism. A tensile force of 2,200 N (495 lbf) shall be applied with a crosshead speed of 1.0 in/min ± 0.2 in/min in the direction of the chain (longitudinal) across the restraint. The tension shall be maintained for 30 seconds, and any separation of the ratchet arm from the pawl shall be noted. The tension shall be released and the sample shall be checked for proper operation as specified in Section 6.12. Observations and the tensile profile shall be recorded. If the sample breaks during the test, the ultimate tensile strength shall be indicated on the profile.

6.9.2.2 The test holder apparatus shall be attached to the tensile test device. One loop of the sample shall be installed on adjacent restraint bearings as shown in Figure 12 and shall be double locked with the ratchet arm engaged at the first notch entering the locking mechanism. A tensile force of 2,200 N (495 lbf) shall be applied with a crosshead speed of 1.0 in/min ± 0.2 in/min to the loop in the direction of the ratchet arm. The tension shall be maintained for 30 seconds, and any separation of the ratchet arm from the pawl shall be noted. The tension shall be released and the sample shall be checked for proper operation as specified in Section 6.12. Observations and the

tensile profile shall be recorded. If the sample breaks during the test, the ultimate tensile strength shall be indicated on the profile.

6.9.2.3 Repeat step 6.9.2.2 for the other loop of the sample.

6.10 Type 3 and Type 4 Restraints Twist Test

6.10.1 Test Equipment and Setup

6.10.1.1 A single test fixture is required for all twist tests. This fixture is shown in Figure 10 and Figure 13 along with test setups for different restraint types.

6.10.2 Application of Test

6.10.2.1 This test applies to rigid, hinged or similar double loop restraints.

6.10.3 Procedure

6.10.3.1 The dimensions and configuration of the test setup shall be as specified in Figure 13. Each loop of the sample shall be secured around one of a pair of drums with the locking mechanism of the restraint positioned midway between the drums. One loop (around the drum) shall be inserted into the hub box and secured as shown. The other loop and drum shall be attached and secured to the rotating end of the test fixture to allow a twist to occur from the center in each direction and generating a torque load of 222.4 N ± 9 N (50 ± 2 ft lbs) for 25 cycles or 50 movements. Each cycle should take no more than 10 seconds to complete. Observations and results shall be recorded.

6.11 Type 3 and Type 4 Restraints Swivel Pry Resistance Test

6.11.1 Test Equipment and Setup

6.11.1.1 A commercially engineered tensile test device with data recording capabilities shall be used for this test. The dimensions and configuration of the test setup shall be as specified in Figure 14.

6.11.2 Procedure

6.11.2.1 This test only applies to restraints that have a swivel and chain or similar combination. One loop of the sample shall be secured and the unit shall be oriented to pull at a 90-degree angle. An increasing load shall be applied to the remaining loop at a rate of 1.0 ± 0.2 inches/minute. On reaching a maximum load of 445 N ± 9 N (100 lbf ± 2 lbf), the load shall be decreased, and the swivel shall be inspected for normal

operation as specified in Section 6.12. Observations and the tensile profile shall be recorded. If the sample breaks during the test, the ultimate tensile strength shall be indicated on the profile.

6.12 Type 3 and Type 4 Restraints Operational Tests

6.12.1 Pawl Ratcheting Test

6.12.1.1 For any restraint designed to allow the ratchet arm to rotate 360º around the pivot, the restraint shall be subjected to this test. The sample shall be tested for pawl ratcheting with the double lock not engaged. The ratchet arm with the pawl shall be engaged in one complete motion beginning with the first through the last notch from the free end of the ratchet arm. The motion shall be continued beyond this such that the ratchet arm rotates completely through the cheek plates and returns to the first notch of the ratchet arm. This shall be performed three times for each ratchet arm of the sample. Observations and results shall be recorded.

6.12.2 Double Locking Test

6.12.2.1 The sample shall be tested for double locking. The double lock shall not be engaged initially. The ratchet arm shall be rotated to engage the third notch from the free end of the ratchet arm with the pawl. Following the supplier's instructions, the double-locking mechanism shall be engaged. It shall be verified that the double lock is engaged by manually attempting to move the ratchet arm beyond the third notch. Again, following the supplier's instructions, the double-locking mechanism shall be disengaged and the restraint shall be opened. This procedure shall be performed three times on each double-locking mechanism of the sample. Observations and results shall be recorded.

6.13 Type 3 and Type 4 Restraints Cheek Plate Test

6.13.1 Test Equipment and Setup

6.13.1.1 The test equipment and setup shall be as shown in Figure 15.

6.13.2 Procedure

6.13.2.1 The sample pawl shall be engaged in the third notch from the free end of the ratchet arm, and the sample shall be double-locked and kept locked throughout the test. The sample ratchet arm shall be clamped in a vise whose jaws are faced with either plastic or soft metal plates.

6.13.2.2 The torque bit shall be inserted between the cheek plates adjacent to the pivot pin that secures the ratchet arm to the cheek plates, as shown in Figure 15. A suitable torque wrench shall be used to apply a clockwise torque up to 23.0 Nm (204 lbf·in) to the torque bit. If the cheek plates yield, deforming to such an extent that a maximum torque of 23.0 Nm (204 lbf·in) cannot be maintained, then the sample shall be considered to have failed. If maximum torque can be applied, that torque shall be maintained for a period of 30 seconds, and then the same torque shall be applied in a counterclockwise direction for 30 seconds.

6.13.2.3 If a cheek plate separates from the pivot pin, the sample shall be removed from the vise. By hand and with the aid of a flat-tip screwdriver, the test administrator shall determine whether it is possible to remove the ratchet arm from the pivot pin and to disengage the ratchet arm from the pawl or to break or bend the ratchet arm sufficiently to enable the sample to be removed from, or placed on, an individual wrist or ankle. Observations and results shall be recorded.

6.14 Type 3 and Type 4 Restraints Double-Lock Impact Test

6.14.1 Test Equipment and Setup

6.14.1.1 The test equipment and setup shall be as shown in Figure 16.

6.14.2 Procedure

6.14.2.1 The sample shall be tested for impact to the double lock. The sample shall be separated midway between the loops so that a single loop of the sample can be tested. Only one loop of the sample shall be tested.

6.14.2.2 The loop shall be engaged around the drum so that the double-locking pin is in the direction of impact against the rod as shown and the loop is snug around the drum. The loop shall be placed in the double-lock position. Five guided impacts shall be made by dropping the assembly from the height indicated. The double lock shall not be reset between impacts. On completion of the five impacts, the loop shall be inspected to determine if the double-locking device has changed to the unlocked position. Remove the sample from the fixture and check whether or not the double lock remains engaged by attempting to manually open and close the restraint. Observations and results shall be recorded. Note that the untested loop of the sample may be used for the testing in Section 6.15, *Type 3 and Type 4 Restraints Compression Test*.

6.15 Type 3 and Type 4 Restraints Compression Test

6.15.1 Test Equipment and Setup

6.15.1.1 The test equipment and setup shall be as shown in Figure 17.

6.15.2 Procedure

6.15.2.1 Only one loop of the sample shall be tested. The double lock shall not be engaged. The ratchet arm shall be rotated to engage the third notch in from the free end of the ratchet arm with the pawl. Using the instructions provided by the supplier, the double-locking mechanism shall be engaged. One loop shall be placed in the fixture as shown in the figure, and a load of 222.4 N ± 9 N (50 lbf ± 2 lbf) shall be applied with a crosshead speed of 0.25 in/min ± 0.05 in/min and held for 10 seconds. On completion of testing, the double-locking mechanism shall be disengaged. For any restraint designed to allow the ratchet arm to rotate 360º around the pivot, the ratchet arm shall be rotated to the fully open position. Otherwise, the restraint shall be opened. Observations and results shall be recorded. Note that the untested loop of the sample may be used for the testing in Section 6.14, *Type 3 and Type 4 Restraints Double-Lock Impact Test*.

6.16 Standard Key Functionality Test

6.16.1 The standard key used to lock/unlock the restraint shall be functionally inspected for satisfactory operation of the locking and double-locking devices.

6.16.1.1 Engage the lock. If the restraint has a double lock, engage the double lock. Follow the supplier’s instructions to disengage first the double lock, if applicable, and then the single lock. This procedure shall be performed 10 times.

6.16.1.2 The test result shall be considered a pass if the key successfully opens each sample on every attempt. Observations and results shall be recorded.

6.17 Nonstandard Key Functionality Test

6.17.1 The nonstandard key used to lock/unlock the restraint shall be functionally inspected for satisfactory operation of the locking and double-locking devices.

6.17.1.1 Engage the lock. If the restraint has a double lock, engage the double lock. Follow the supplier’s instructions to disengage first the double lock, if applicable, and then the single lock. This procedure shall be performed 10 times.

6.17.1.2 The test result shall be considered a pass if the key successfully opens the restraint on every attempt.

6.17.2 Unlocking the restraint with a standard key shall be attempted. If the standard key does not unlock the restraints, the result is considered a pass. Observations and results shall be recorded.

7. LABELING AND INFORMATION

7.1 General Product Label Requirements for Restraint Models

7.1.1 Type 1 and Type 2 restraints shall be marked with at least the lot number and date of manufacture listed as quarter and year, at a minimum.

7.1.2 Type 1 and Type 2 restraints shall have a product label in the packaging with the restraints that includes all required information as described in Section 7.1.4.

7.1.3 Type 3 and Type 4 restraints shall have the product label permanently and visibly marked on the restraint that includes all required information as described in Section 7.1.4.

7.1.4 At a minimum, the following information shall be marked legibly on the product label(s):

- Legal name of the supplier.
- Model number.
- Type of restraint (Type 1, Type 2, Type 3, or Type 4).
- Type 3 and Type 4 restraints only: Unique serial number.

7.1.5 All worded portions of a required product label shall appear in English, but other languages may be added.

7.2 Compliance Statement for Each Certified Product of a Compliant Restraint Model

7.2.1 The compliance statement shall be included with the user information required in Section 7.3.

7.2.2 A certified product shall have the following compliance statement in letters at least 2.5 mm (3/32 inch) high:

"PURSUANT TO NIJ CR-1001.00, THIS RESTRAINT MODEL HAS BEEN TESTED AND FOUND TO BE COMPLIANT WITH THE REQUIREMENTS OF NIJ STANDARD-1001.00 (CRIMINAL JUSTICE RESTRAINTS STANDARD)."

7.3 User Information to Be Provided by the Supplier of the Restraint

7.3.1 In order to have a restraints model tested under this standard, the supplier must agree that, if the model is found to be compliant, it will provide written user information including, but not limited to, warnings, information and instructions with each individual product.

7.3.2 The supplier shall provide the required user information in such a manner as to make such information clear, prominent and immediately available to any individual opening the package.

7.3.3 The supplier shall provide at least the following warnings, information, and instructions as part of the written user information:

- Legal name and legal address of the supplier.
- Country of manufacture.
- Instructions for proper application of restraints to a subject, as intended by the supplier, including safety considerations or hazards regarding use.
- Warranty information, including length of warranty.
- Specific materials of construction.
- Type of finish for metallic restraints.
- Weight.
- Care and maintenance[3] instructions, including guidelines for inspection.
- Descriptions of available sizes, including the ranges in wrist or ankle size for persons fitting each particular restraint size.

[3] See definitions for care and maintenance in Chapter 3.

8. APPENDIX

Figure 1. Examples of Type 1 Restraints

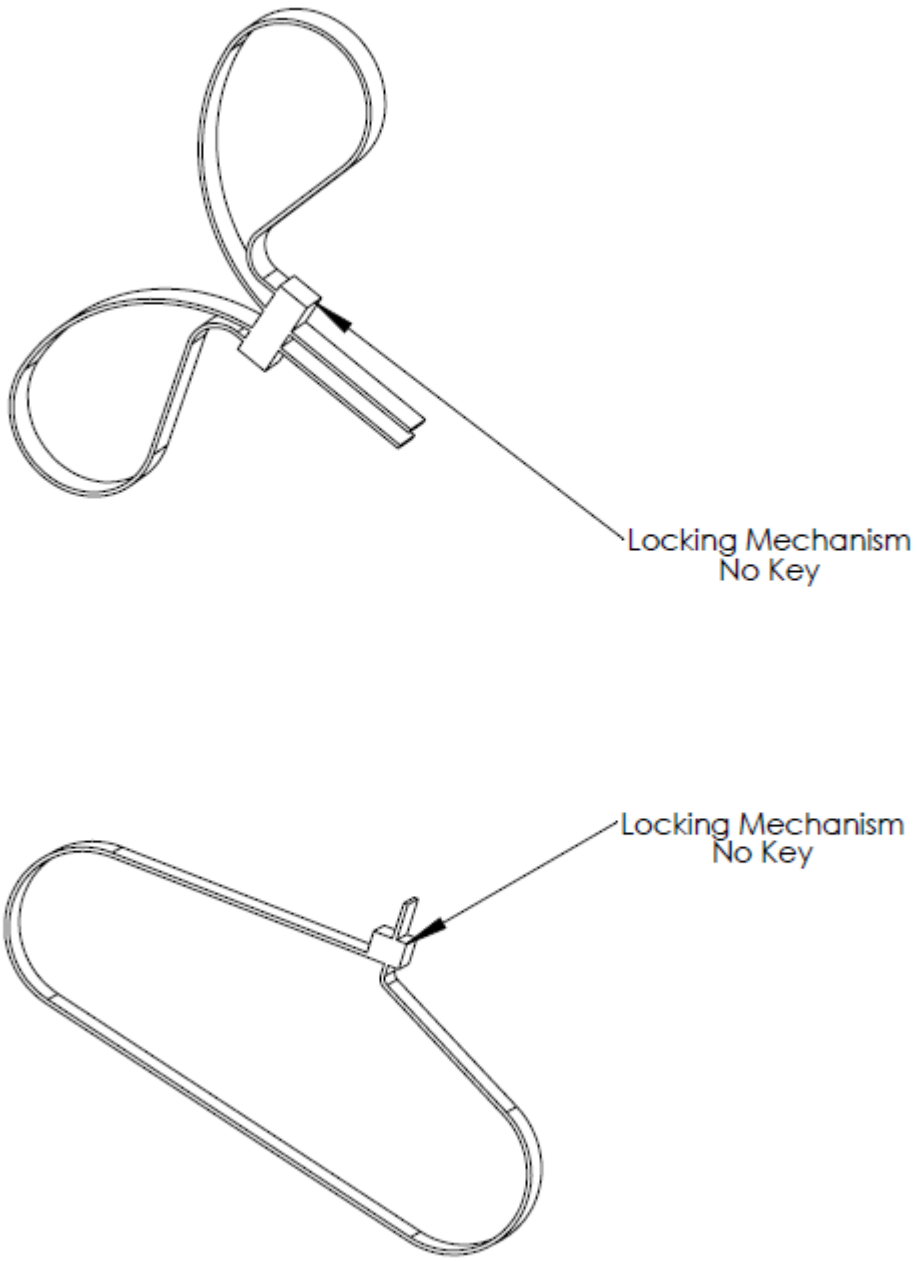

Figure 2. Examples of Type 2 Restraints

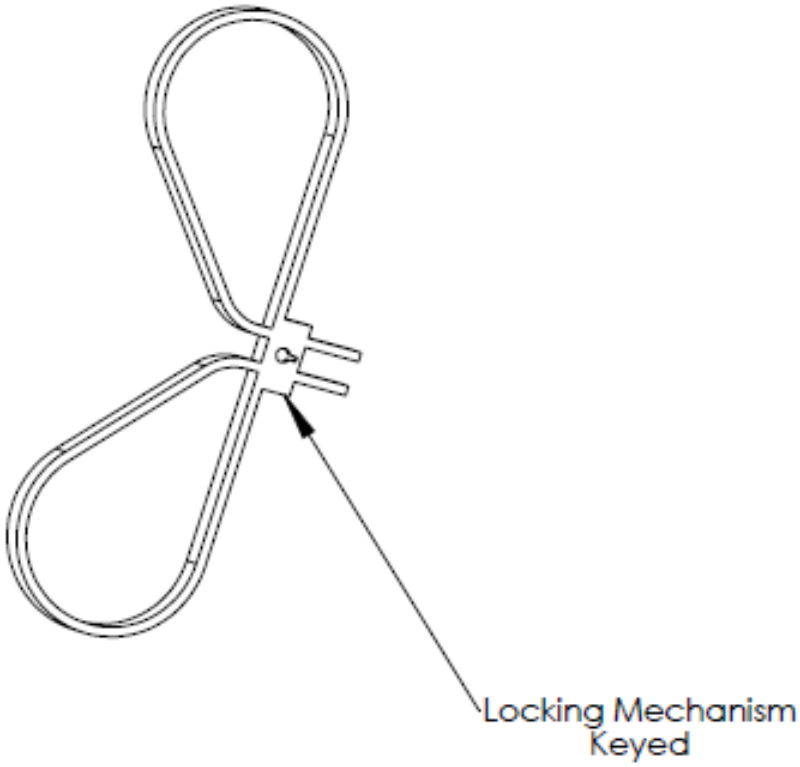

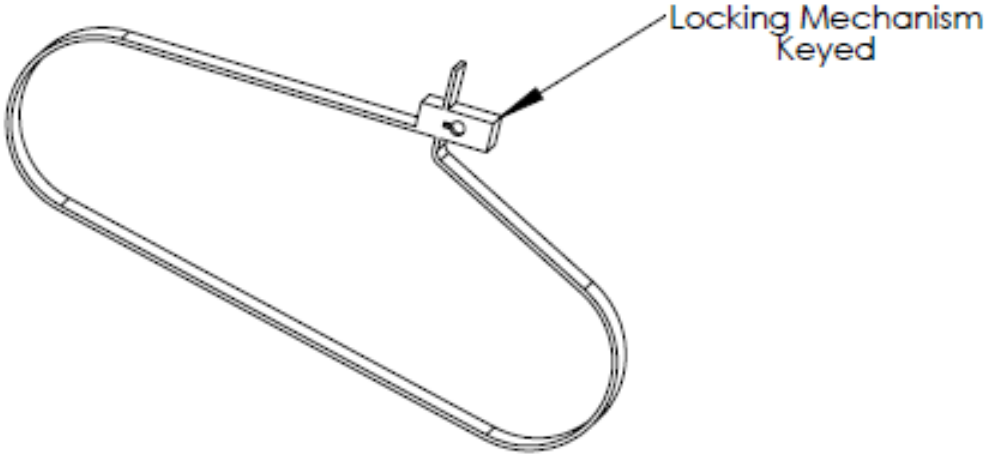

Figure 3. Example of Type 3 Restraint

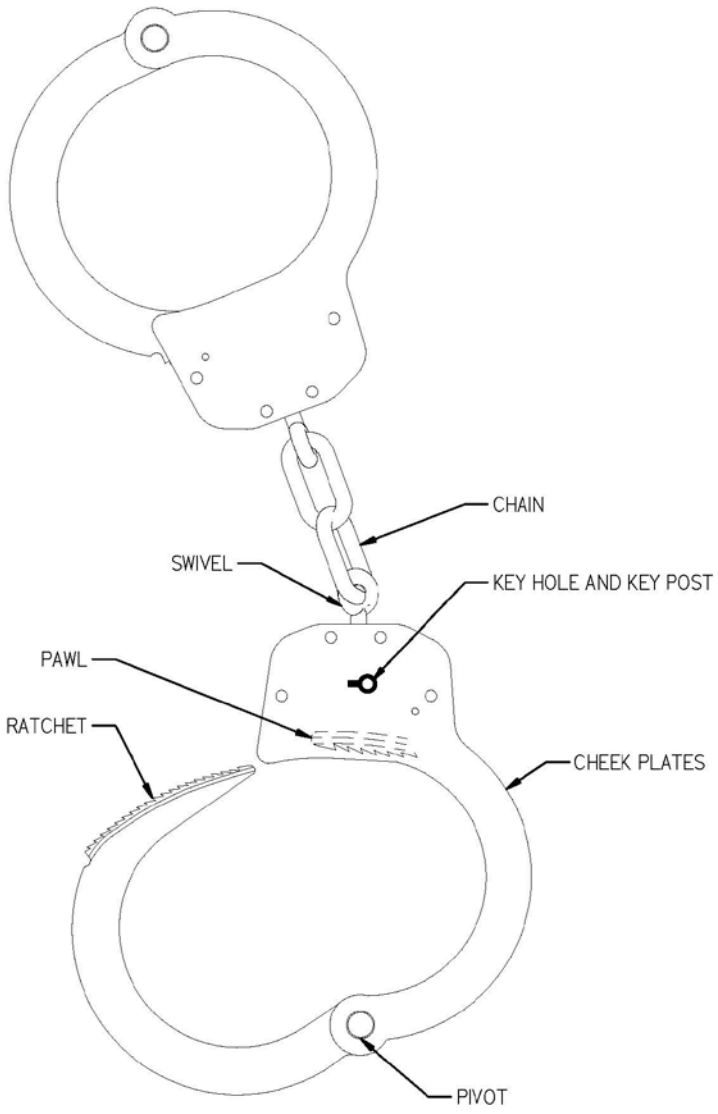

Figure 4. Standard Key Dimensions

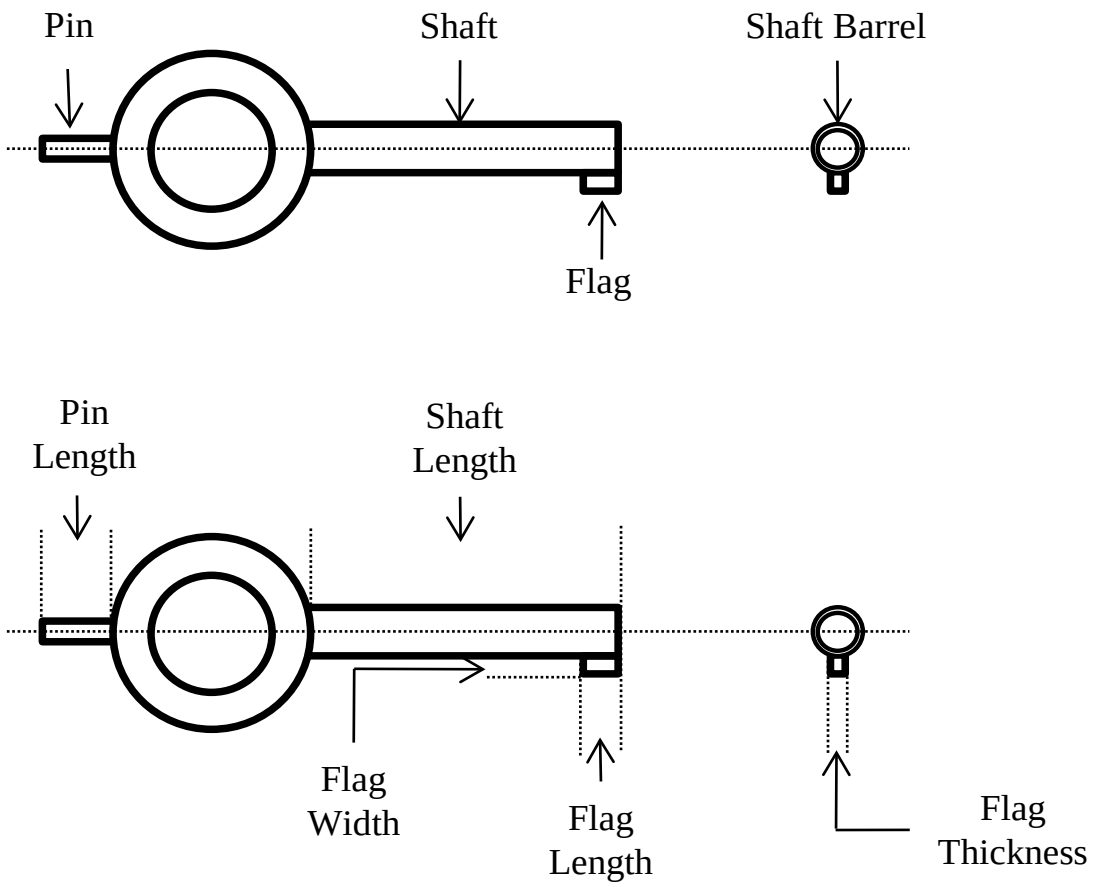

Overall Length	Shaft Length	Pin Length	Pin Diameter	Flag Thickness	Flag Length	Flag Width	Shaft Barrel Inside Diameter	Shaft Barrel Outside Diameter
No requirement	Minimum of 0.966”	Minimum of 0.213”	0.075”	0.040”	0.125”	0.062”	0.100”	0.139”

Note: Tolerance for all measurements is ± 0.010

Figure 5. Individual Loop Dynamic Load Test Setup

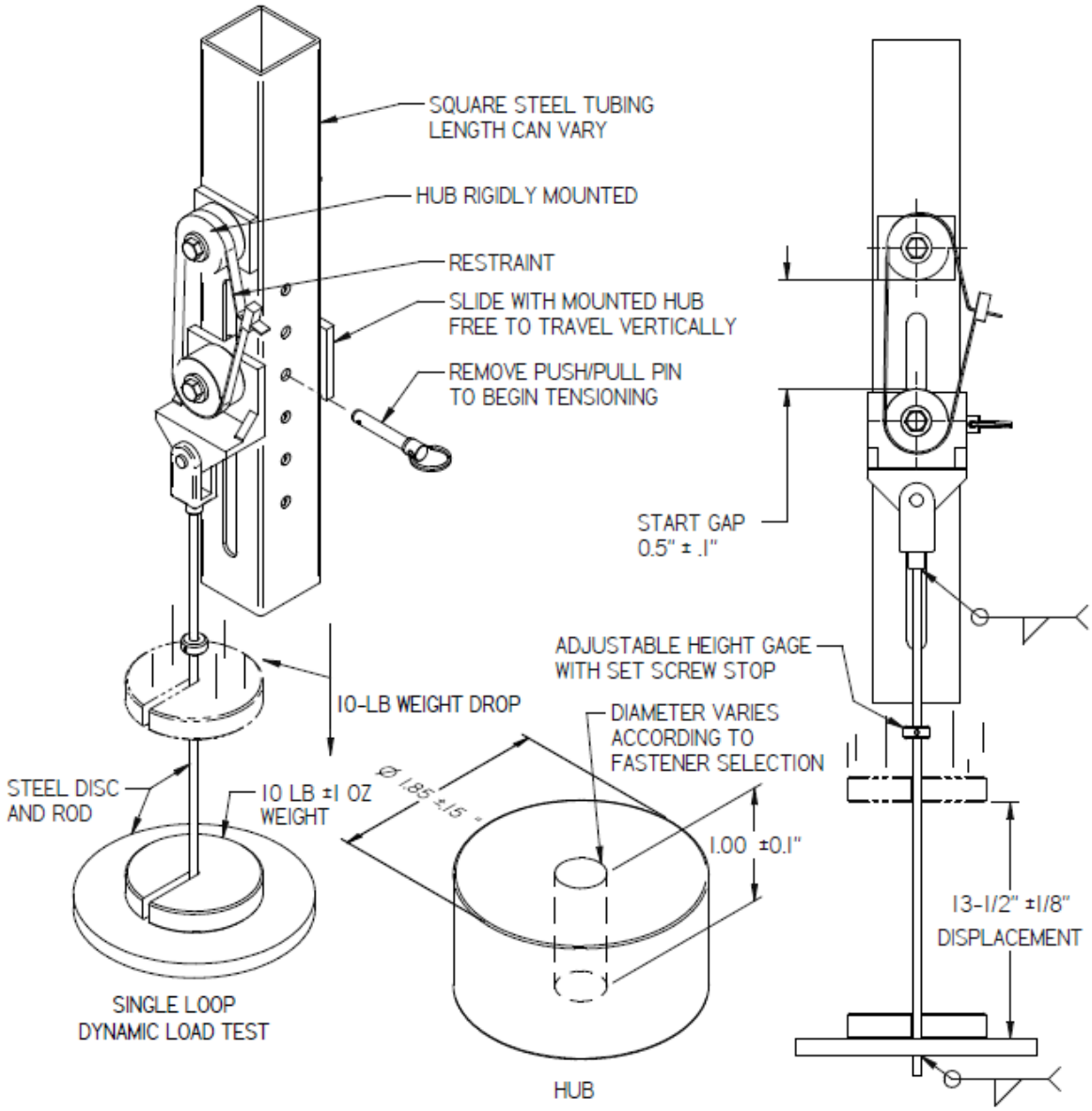

1. FABRICATE HUB WITH ALUMINUM OR STEEL.

2. HUB OUTSIDE DIAMETER HAS 125μ SURFACE FINISH

3. TOTAL WEIGHT OF ALL COMPONENTS (LESS 10-LB TEST WEIGHT) SUPPORTED BY THE RESTRAINT SHALL BE 9-10 LBS MAX.

Figure 6. Double Loop Dynamic Load Test Setup for Nonmetallic Restraints

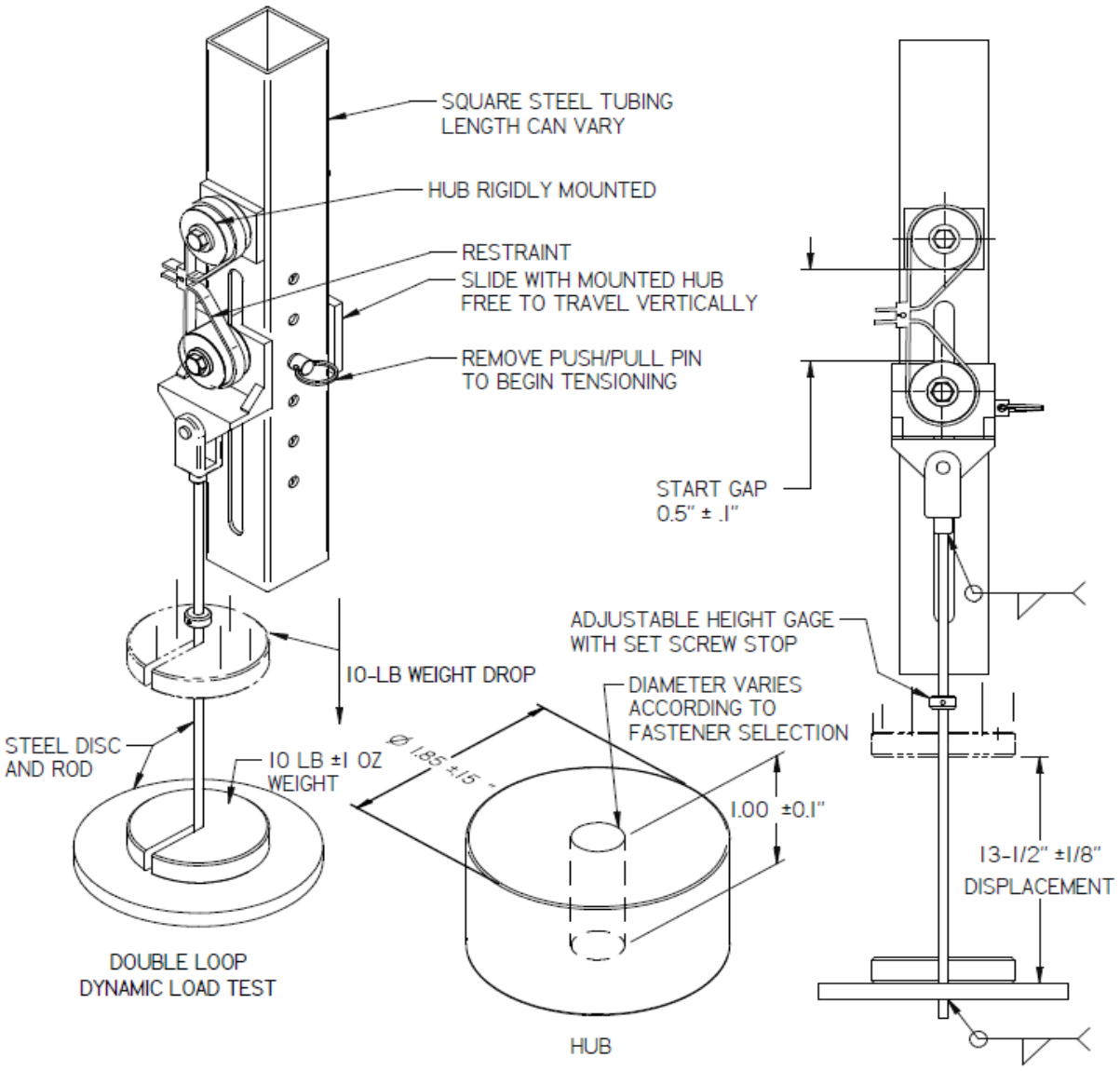

1. FABRICATE HUB WITH ALUMINUM OR STEEL.

2. HUB OUTSIDE DIAMETER HAS 125μ SURFACE FINISH

3. TOTAL WEIGHT OF ALL COMPONENTS (LESS 10-LB TEST WEIGHT) SUPPORTED BY THE RESTRAINT SHALL BE 9-10 LBS MAX.

Figure 7. Double Loop Dynamic Load Test Setup for Metallic Restraints

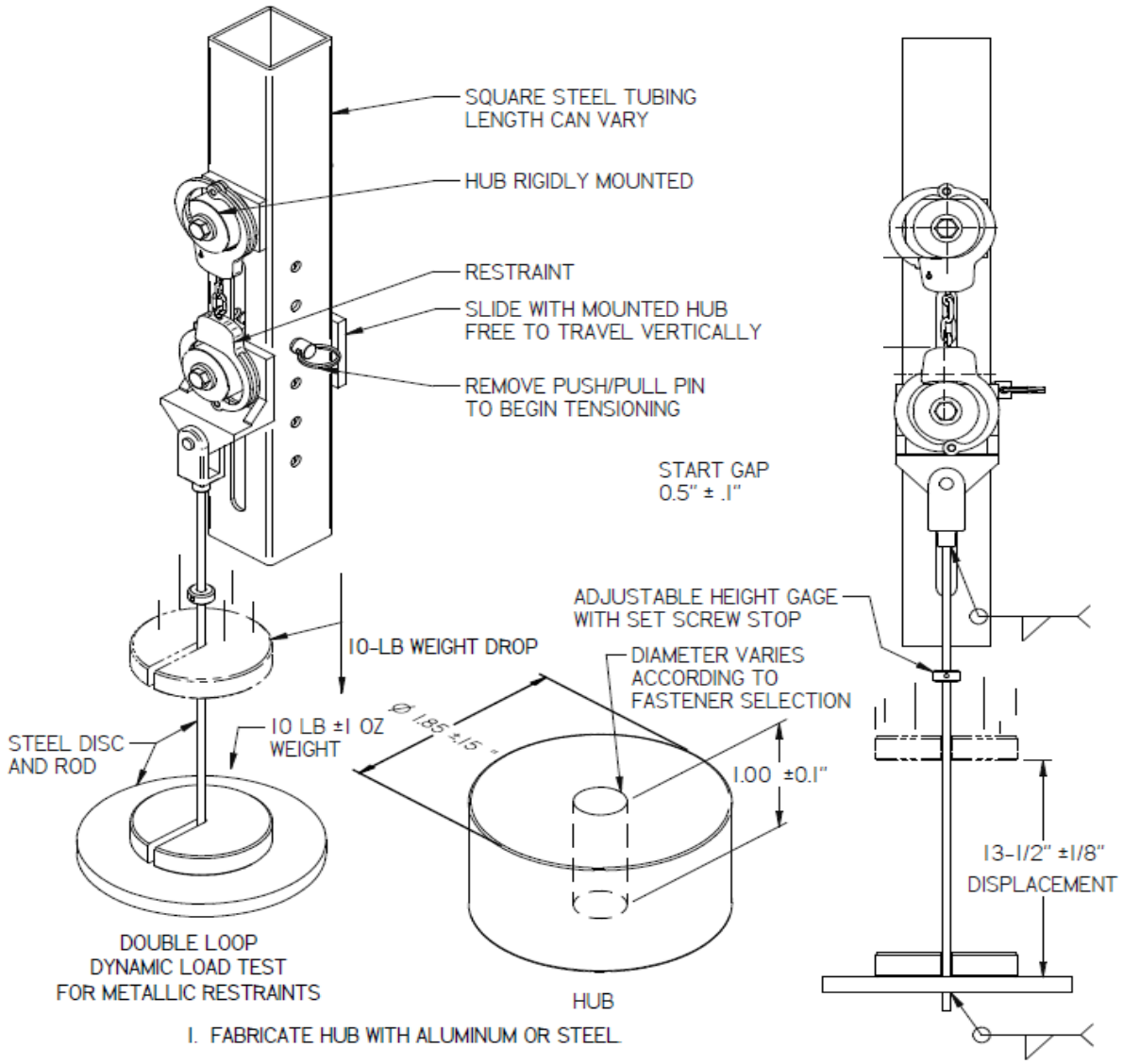

1. FABRICATE HUB WITH ALUMINUM OR STEEL.
2. HUB OUTSIDE DIAMETER HAS 125μ SURFACE FINISH
3. TOTAL WEIGHT OF ALL COMPONENTS (LESS 10-LB TEST WEIGHT) SUPPORTED BY THE RESTRAINT SHALL BE 9-10 LBS MAX.

Figure 8. Individual Loop Static Load Test Setup

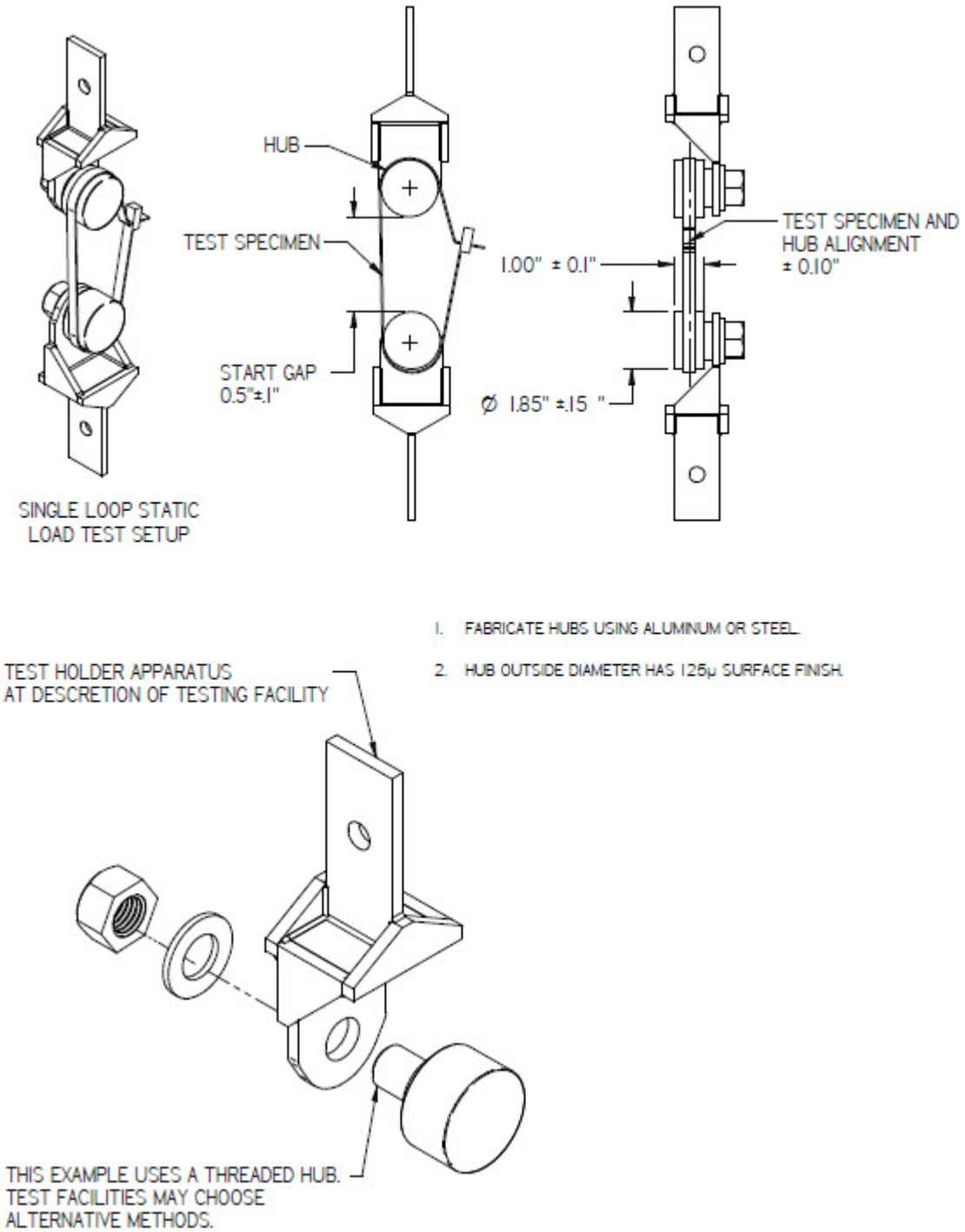

Figure 9. Double Loop Static Load Test Setup

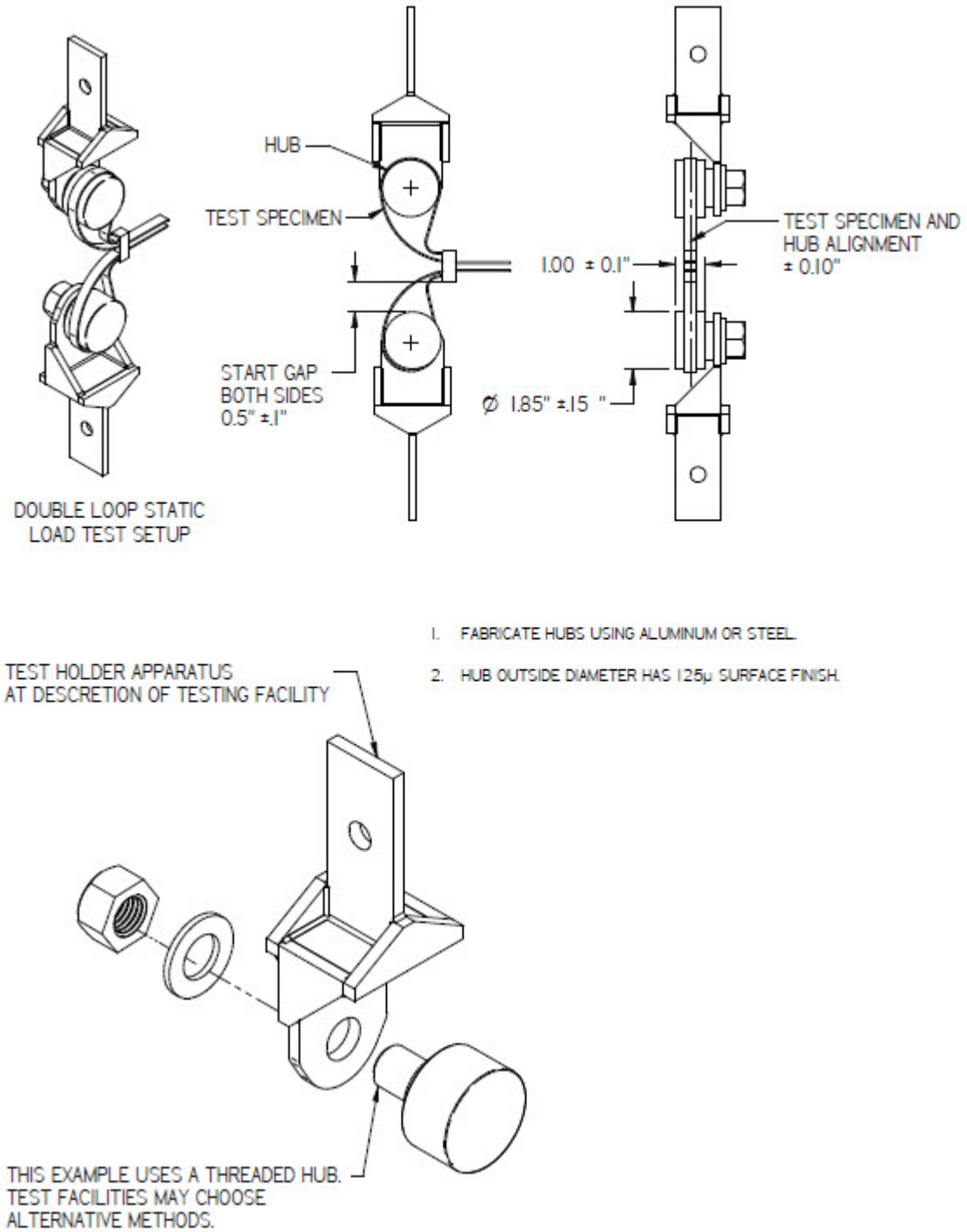

Figure 10. Restraint Retention System Twist Test Setup

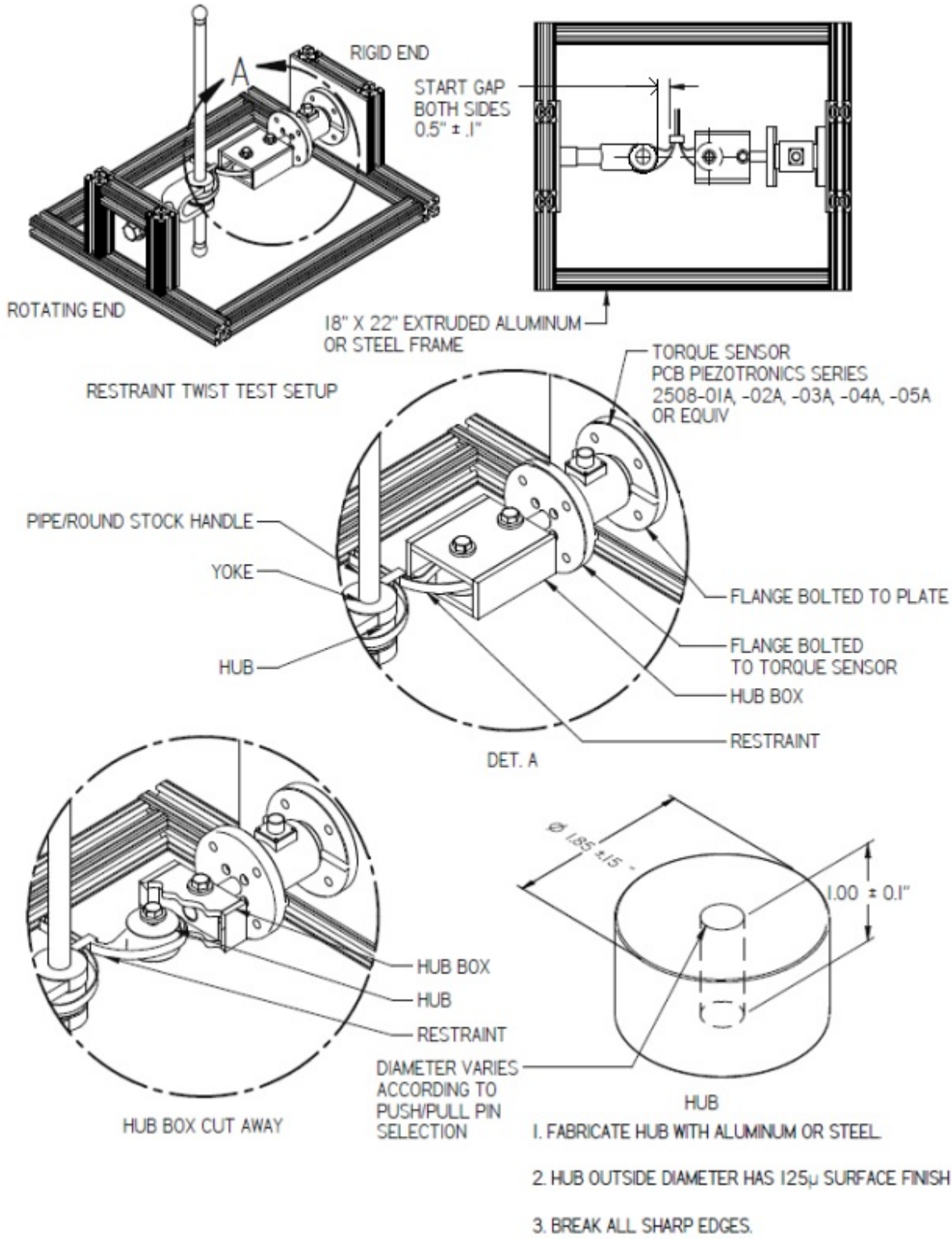

Figure 11. Static Load Test Setup

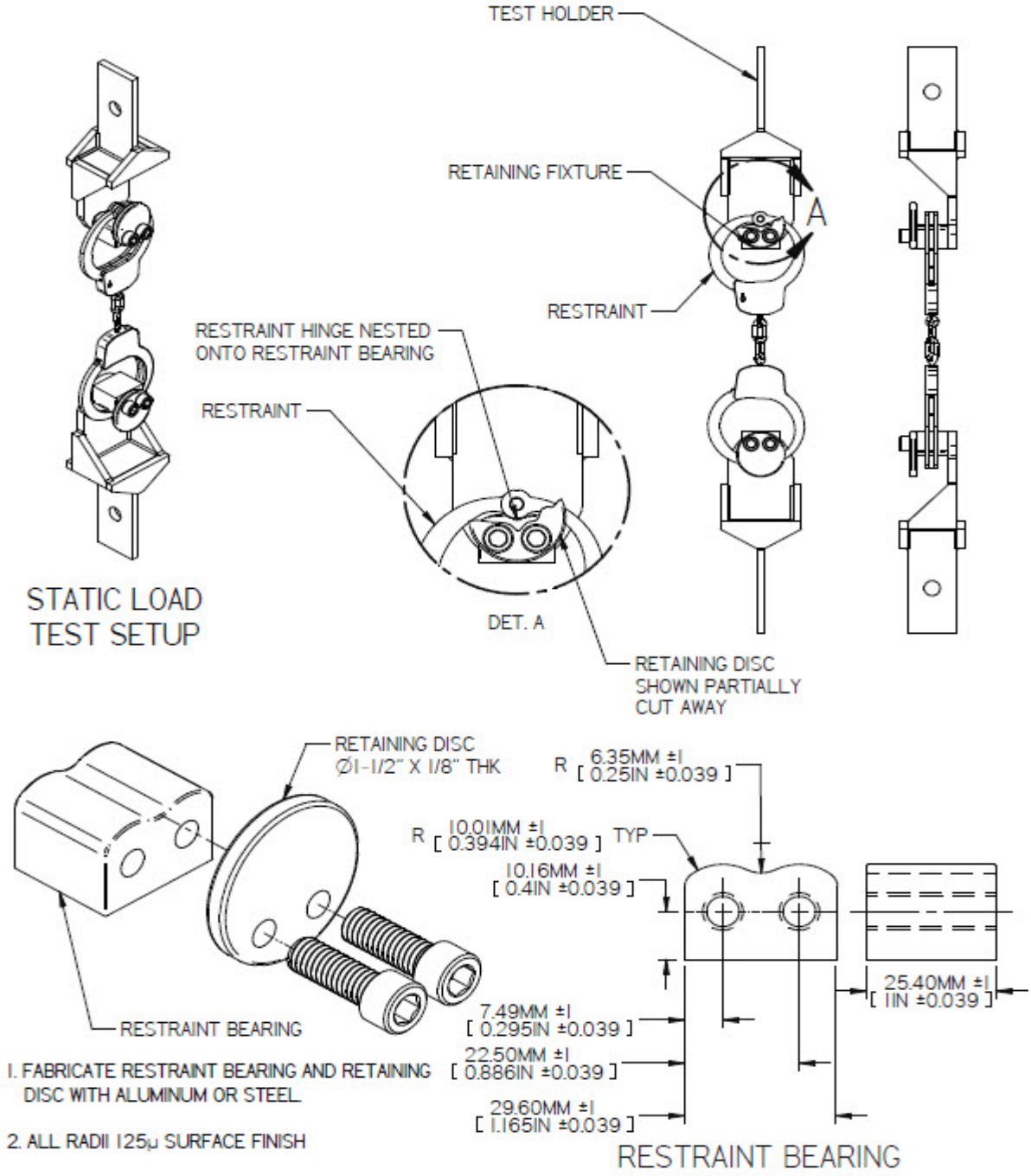

Figure 12. Static Load Test Setup for Individual Loops

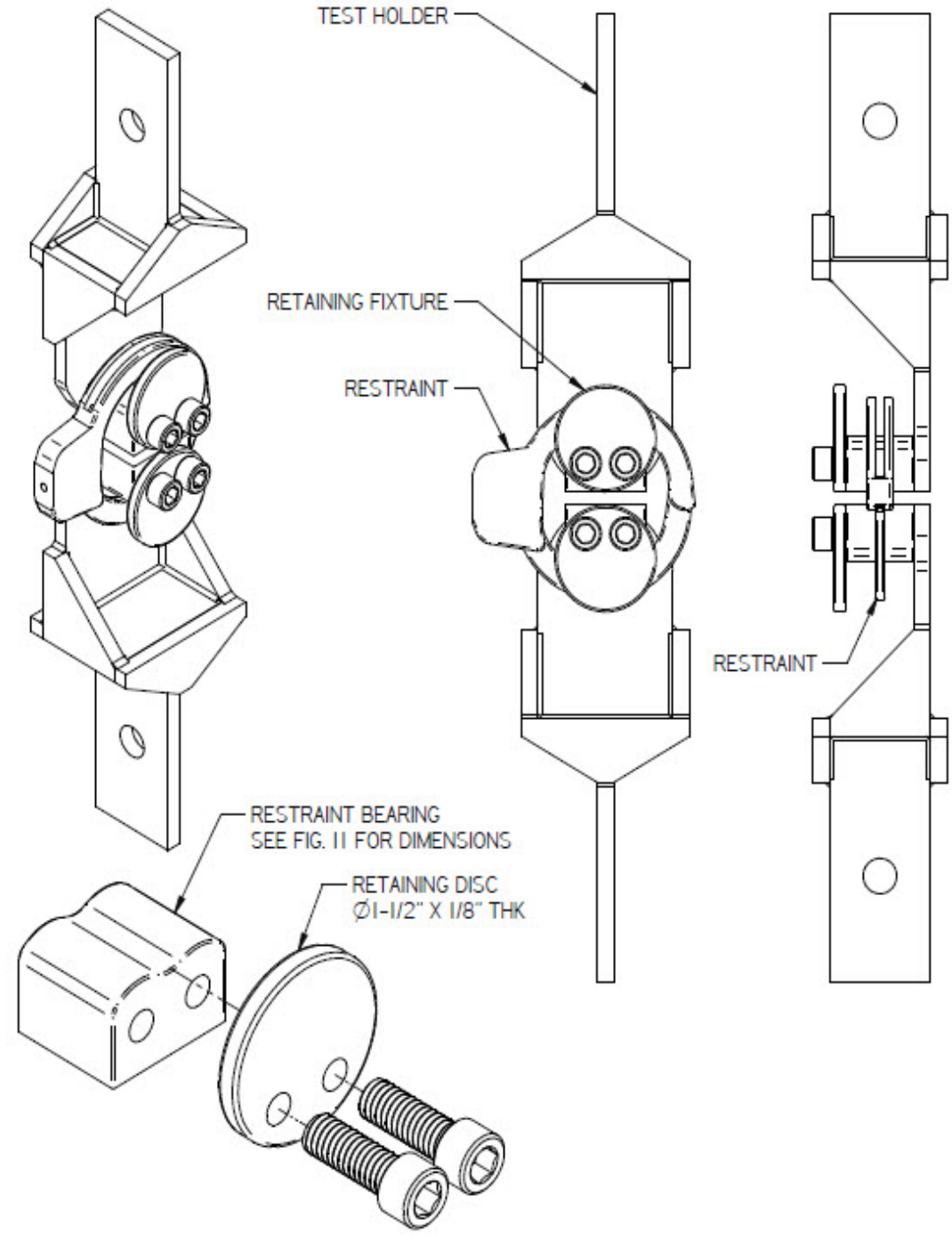

1. FABRICATE RESTRAINT BEARING AND RETAINING DISC WITH ALUMINUM OR STEEL.

2. ALL RADII 125μ SURFACE FINISH

Figure 13. Restraint Twist Test Setup

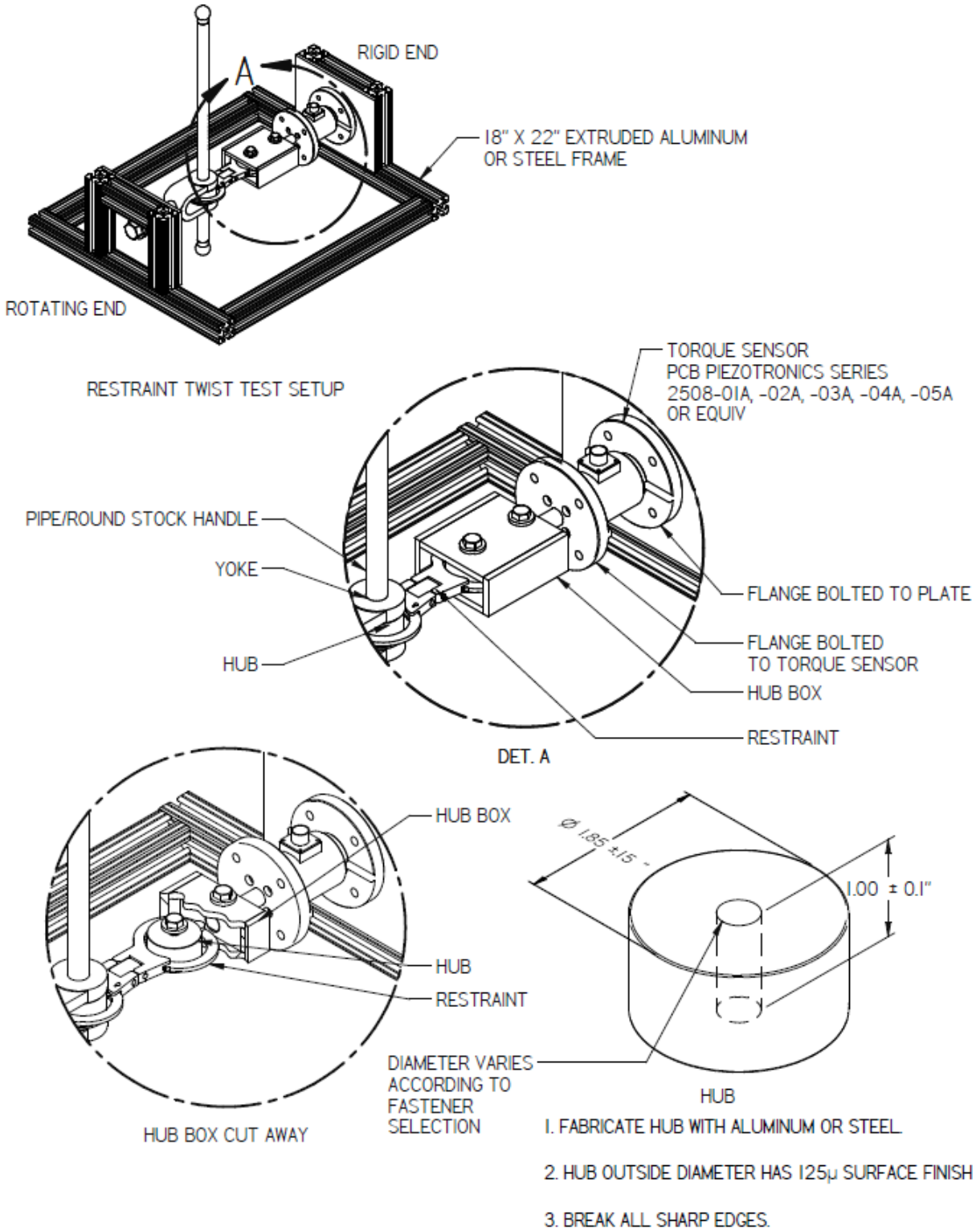

Figure 14. Swivel Pry Test Setup

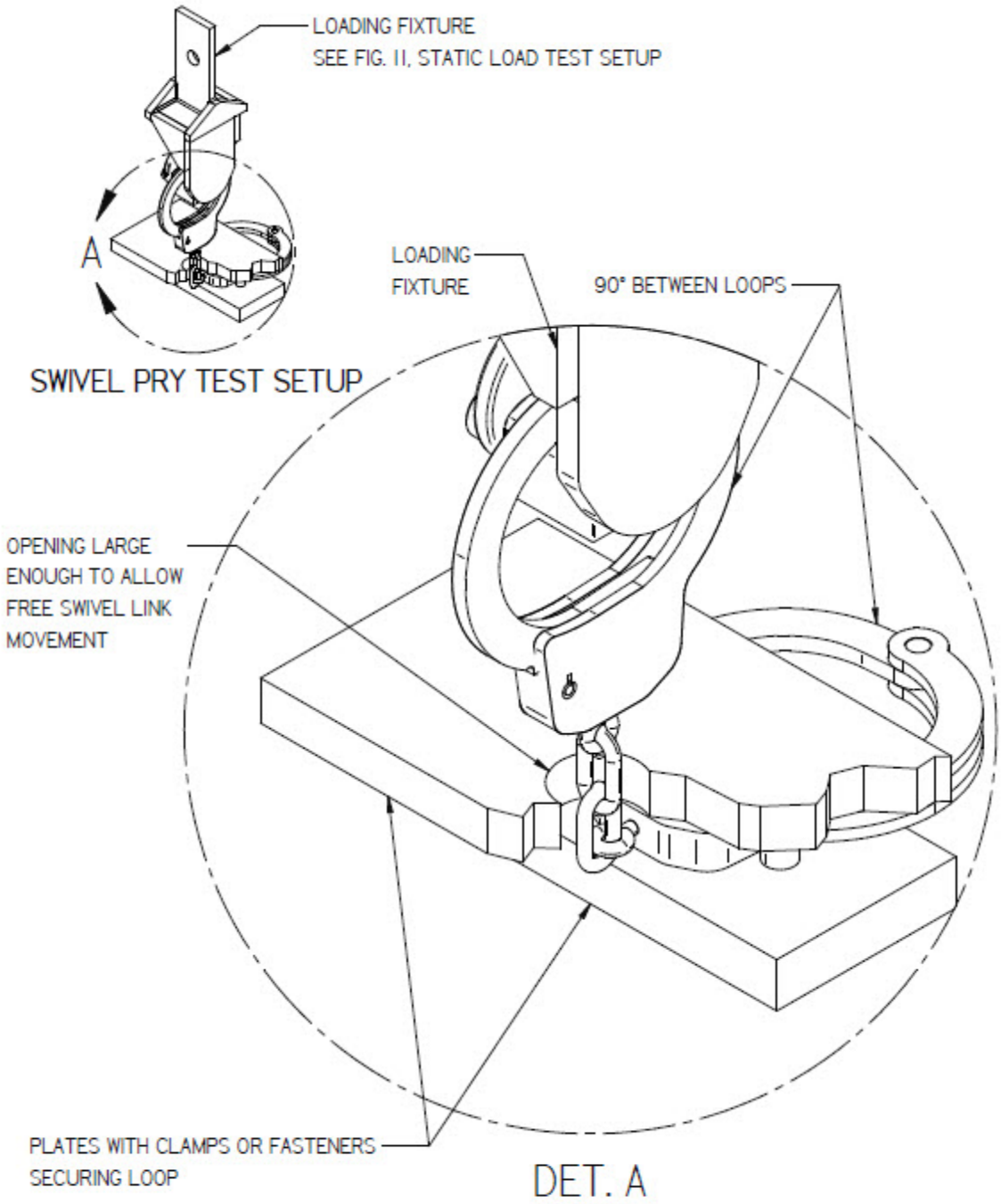

8.6

Figure 15. Cheek Plate Test Setup

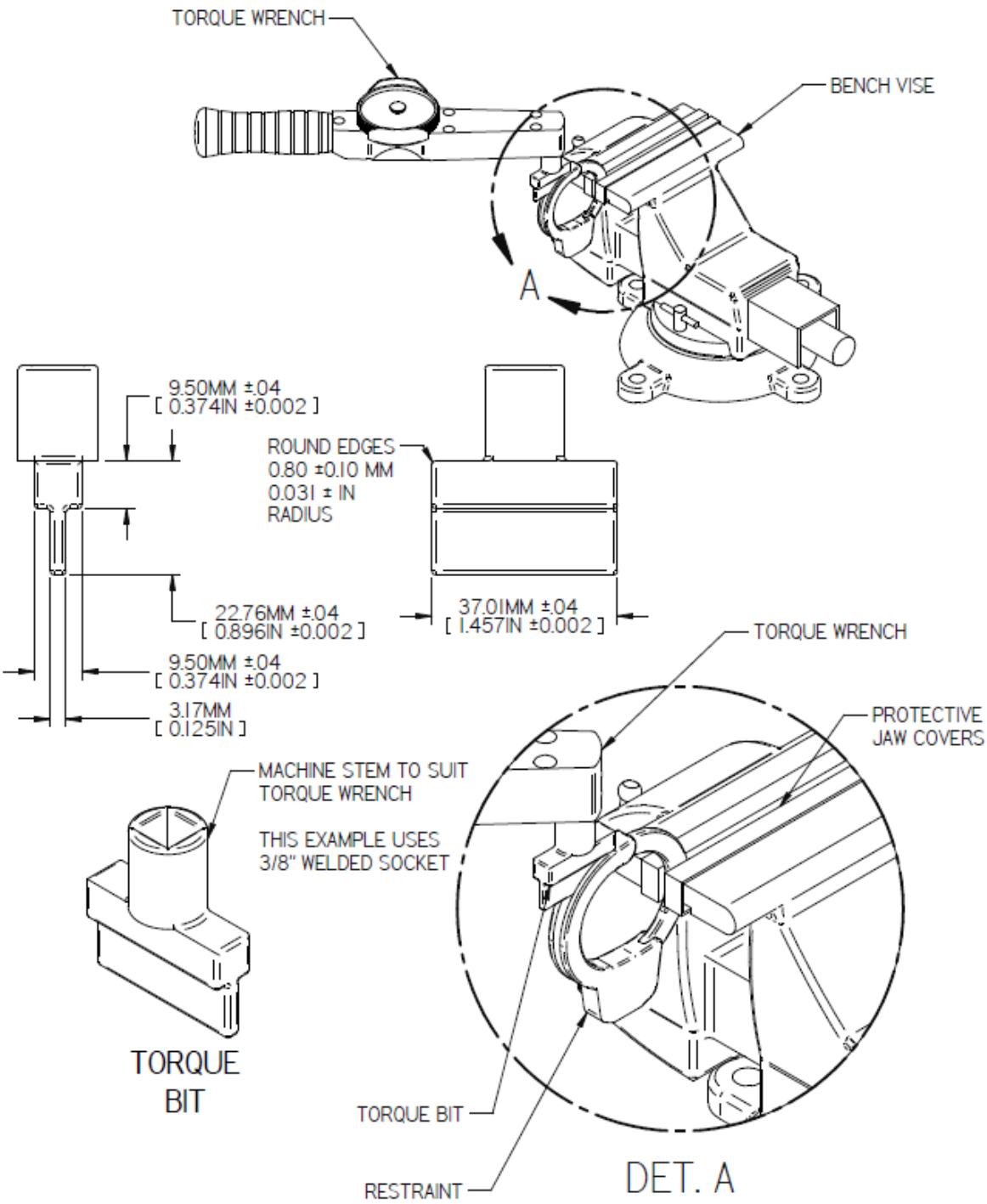

Figure 16. Double Lock Impact Test Setup

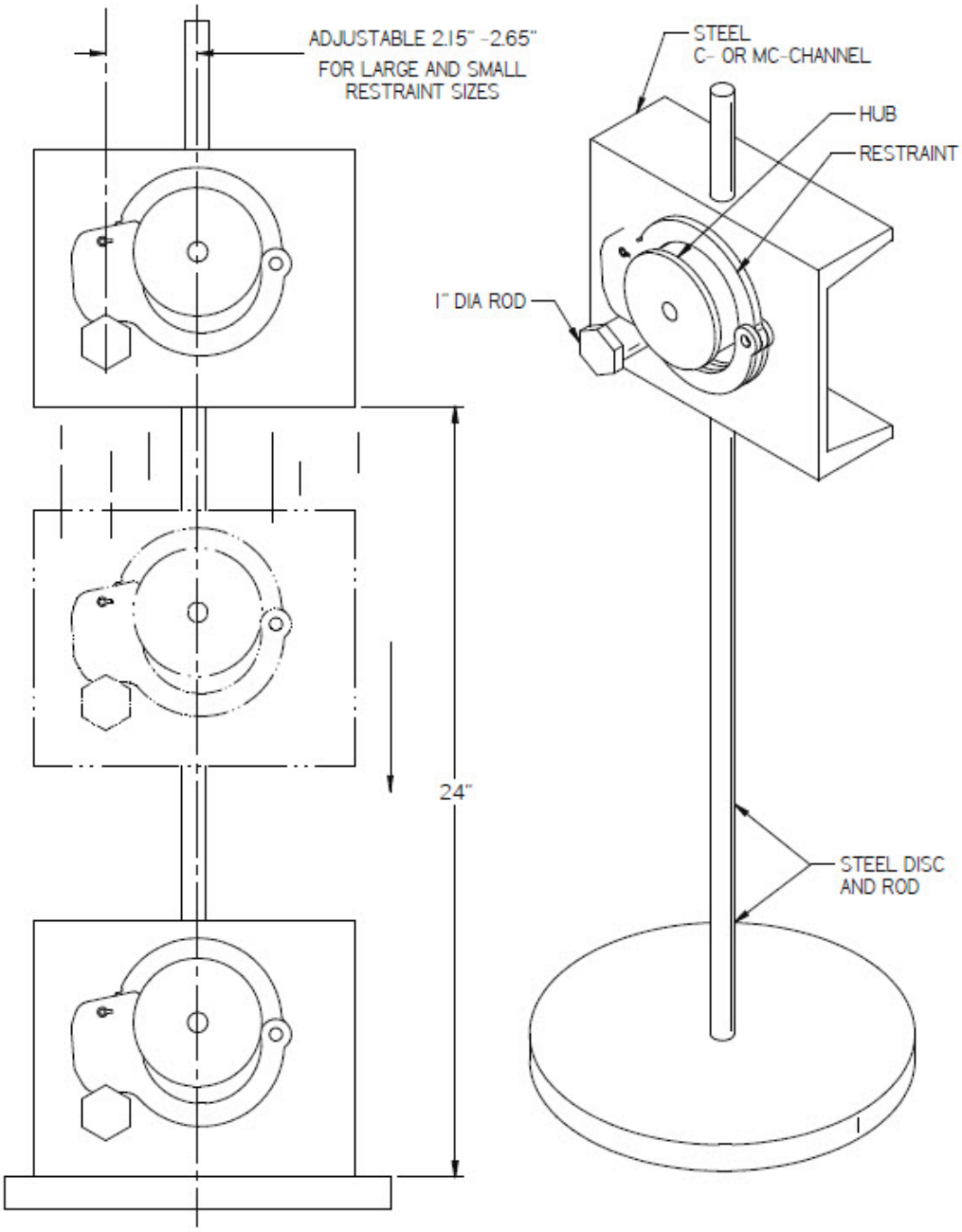

Figure 17. Compression Test Setup

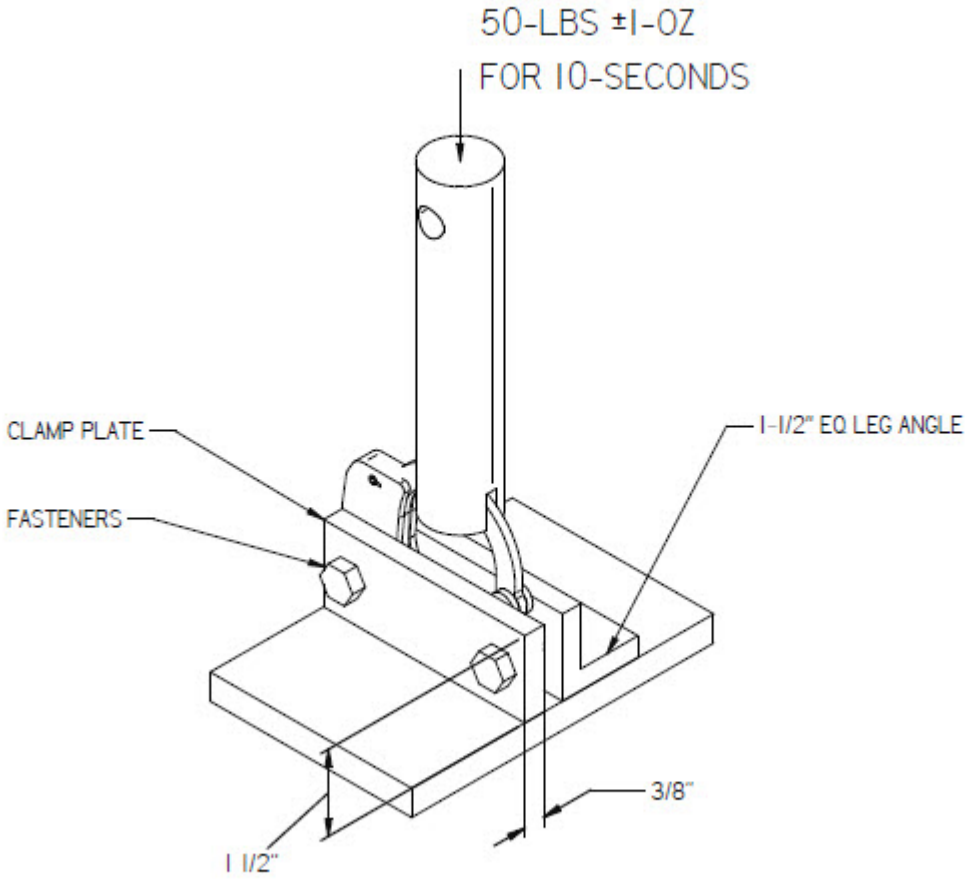

About the Law Enforcement and Corrections Standards and Testing Program

The National Institute of Justice (NIJ) Standards and Testing Program is sponsored by the NIJ Office of Science and Technology within the U.S. Department of Justice, Office of Justice Programs. The program responds to provisions in the Homeland Security Act of 2002 that authorize the NIJ Office of Science and Technology to establish and maintain performance standards (in accordance with the National Technology Transfer and Advancement Act of 1995) for law enforcement technologies that may be used by federal, state and local law enforcement agencies, and to test and evaluate those technologies. The Homeland Security Act of 2002 also authorizes the NIJ Office of Science and Technology to establish and maintain a program to certify, validate and mark or otherwise recognize law enforcement technology products that conform to the standards mentioned above.

The NIJ Standards and Testing Program works to identify the needs of state and local criminal justice system practitioners for equipment standards and test protocols, develops voluntary performance standards for specific criminal justice tools and technologies, establishes conformity assessment requirements for demonstrating that commercially available equipment conforms to those standards, and publishes listings of product models that have been tested through one or more specified organizations and found to comply with the standards. The standards development process begins with the operational needs and requirements of practitioners in the field being defined, and, based on those needs, the standards are developed principally by a special technical committee led by criminal justice practitioners and including testing and conformity assessment experts, other technical experts, federal partners and members from practitioner stakeholder organizations. Manufacturers, vendors and other interested parties are provided with an opportunity to review and comment on draft standards prior to their publication.

As indicated above, all NIJ standards developed through the Standards and Testing Program are voluntary standards. There is no requirement or obligation for manufacturers, law enforcement agencies or others to follow or adopt these voluntary law enforcement technology equipment standards. The primary intent of these standards is to provide the end user of a model of equipment found to be compliant with a particular standard with performance information on key equipment characteristics, provide a level of confidence in that particular model's fitness for use in specified circumstances and allow comparison of product models based on standardized testing methods and performance requirements. These standards do not specify a particular solution but rather define what a potential solution must accomplish. The ultimate goal is to help ensure to the degree possible that law enforcement technology equipment is safe, reliable and effective.

Publications related to the Standards and Testing Program, including the voluntary standards and associated documents, are available at no charge through the National Law Enforcement and Corrections Technology Center-National (NLECTC-National) and also are available online at http://www.nij.gov/standards and http://www.justnet.org. To request a document or additional information, please call (800) 248-2742 or send an e-mail to asknlectc@justnet.org.

Users of NIJ standards are advised to check with http://www.nij.gov/standards on a regular basis to determine whether a particular law enforcement technology equipment standard has been revised or superseded, or the compliance status of a particular model has changed.

This document is not intended to create, does not create, and may not be relied upon to create any rights, substantive or procedural, enforceable at law by any party in any matter civil or criminal.

Opinions or points of view expressed in this document represent a consensus of the authors and do not represent the official position or policies of the U.S. Department of Justice. The products and manufacturers discussed in this document are presented for informational purposes only and do not constitute product approval or endorsement by the U.S. Department of Justice.

The National Institute of Justice is a component of the Office of Justice Programs, which also includes the Bureau of Justice Assistance; the Bureau of Justice Statistics; the Office for Victims of Crime; the Office of Juvenile Justice and Delinquency Prevention; and the Office of Sex Offender Sentencing, Monitoring, Apprehending, Registering, and Tracking.

U.S. Department of Justice
Office of Justice Programs
National Institute of Justice

Washington, DC 20531

Official Business
Penalty for Private Use $300

NCJ 247988

PRESORTED STANDARD
POSTAGE & FEES PAID
DOJ/NIJ
PERMIT NO. G–91